SCOPE OF WORK

1. INSTALL 2 NEW DBLWL FIBERGLASS UNDERGROUND FUEL STORAGE TANKS - 20K TANK - SPLIT12K/8K
2. INSTALL NEW SUBMERSIBLE PUMPS, ENCLOSURES AND ALL REQUIRED FITTINGS, CONNECTIONS AND ELECTRICAL AS REQUIRED.
3. INSTALL NEW DBLWL FIBERGLASS FUEL SUPPLY PIPING AND FITTINGS AS REQUIRED.
4. INSTALL NEW SUBMERSIBLE FIBERGLASS STAGE II VR PIPING AND VENTS AS REQUIRED.
5. MAINTAIN EXISTING PUMP ISLANDS AND CONCRETE MATS. SAW CUT TO MINIMIZE REMOVAL FOR NEW INSTALL.
6. OWNER FURNISHED PRODUCTS: THE FOLLOWING PRODUCTS AND MATERIALS WILL BE FURNISHED/DELIVERED BY THE OWNER AND INSTALLED BY CONTRACTORS:

A. NEW UNDERGROUND STORAGE TANKS, STRAPS AND TURNBUCKLES.
B. PRODUCT DISPENSERS.
C. ISLAND FORMS AND PIPE BOLLARDS.
D. UNDERGROUND PIPING AND TANK TOP FITTINGS.
E. DISPENSER HOSES, BREAKAWAYS AND NOZZLES.
F. MISCELLANEOUS ELECTRONIC EQUIPMENT AND SIGNAGE AS DESCRIBED BY THE CONSTRUCTION DOCUMENTS.

FOR ALL OTHER SPECIFIC EQUIPMENT REFER TO "EQUIPMENT AND PARTS LIST" AS SHOWN IN THE CONSTRUCTION DOCUMENTS.

8. THE LATEST ISSUE OF THE FOLLOWING STANDARDS AND CODES SHALL APPLY:

A. FLORIDA STATE BUILDING CODE
B. NATIONAL ELECTRICAL CODE (NFPA 70)
C. FLAMMABLE AND COMBUSTIBLE LIQUIDS CODE (NFPA 30)
D. CODE FOR MOTOR FUEL DISPENSING FACILITIES AND REPAIR GARAGES (NFPA 30A)
E. INSTALLATION OF UNDERGROUND PETROLEUM STORAGE SYSTEMS (API 1615)
F. STAGE II VAPOR RECOVERY IS REQUIRED

Call 2 full business days before you dig

It's the law!

(800) 432-4770

www.callsunshine.com

Cumberland FARMS

STORE V#: 0636
22905 S.R.7
BOCA RATON, FLORIDA 33428

Owner:
Cumberland Farms, Inc.
777 Dedham Street
Canton, MA 02021
(781) 828-4900

Engineer:
CoreStates, Group
1700 Industrial, Drive Suite B
Rogers, AR, 72756
John Ferguson, P.E.
Florida Reg. #: 67173
Phone: (479) 986-4400 Fax: (479) 986-4401
jferguson@core-eng.com

Engineer:
CoreStates, Group
1700 Industrial, Drive Suite B
Rogers, AR, 72756
David Leiffer, P.E.
Florida Reg. #: 68170
Phone: (479) 986-4400 Fax: (479) 986-4401
dleiffer@core-eng.com

GENERAL NOTES

1. CONTRACTOR SHALL BE AWARE OF THE FACT THAT CONSTRUCTION WILL TAKE PLACE WITHIN THE CONFINES OF THE OWNER'S PROPERTY THAT MAY BE IN OPERATION DURING THE CONSTRUCTION AND CONTRACTOR SHALL ENDEAVOR TO LIMIT INTERFERENCE WITH ITS OPERATION TO A MINIMUM.
2. PRIOR TO START OF CONSTRUCTION, CONTRACTOR SHALL MEET WITH REPRESENTATIVES OF THE OWNER, TO HAVE AN AREA DESIGNATED FOR STORAGE OF EQUIPMENT AND PARKING OF THE REQUIRED EQUIPMENT. THIS AREA AS WELL AS THE ACTUAL JOB SITE SHALL BE ENCLOSED IN CHAINLINK FENCING. A TRAFFIC LANE SHALL BE DESIGNATED FOR INGRESS AND EGRESS FROM THE WORK AREA. IF REQUIRED, FLAG MEN SHALL BE PROVIDED TO PROVIDE A SAFE AND EFFICIENT MOVEMENT OF VECHICLES. NO CHANGES TO THE WORK AREA OR TO THE AGREED TRAFFIC PATTERN SHALL BE MADE WITHOUT PRIOR APPROVAL OF THE OWNER'S CONSTRUCTION MANAGER. THE CONSTRUCTION MANAGER WILL SECURE THE APPROVAL FOR SUCH CHANGES.
3. IT SHALL BE UNDERSTOOD BY THE CONTRACTOR THAT HE IS RESPONSIBLE FOR THE COMPLETION OF ALL PHASES OF CONSTRUCTION AND THAT HE IS TO TURN OVER TO THE OWNER THE FACILITY IN OPERATING CONDITION.
4. ALL TESTING SHALL BE SUPPLIED BY THE CONTRACTOR EXCEPT WHERE NOTED, AND BE PERFORMED BY QUALIFIED PERSONNEL. THIRD PARTY TESTING SHALL BE PERFORMED BY LICENSED ENTITIES AND THE RESULTS PROVIDED TO THE CONSTRUCTION MANAGER.
5. CONTRACTOR SHALL MAINTAIN AT THE JOB SITE A COMPLETE SET OF DRAWINGS AND SPECIFICATIONS AND MAKE THEM AVAILABLE TO THE CONSTRUCTION MANAGER AS LONG AS CONSTRUCTION IS IN PROGRESS.
6. ALL EQUIPMENT TO BE INSTALLED WILL BE UL AND STATE APPROVED.
7. UPON COMPLETION OF THE WORK, THERE SHALL BE A FINAL INSPECTION OF THE PROJECT BY THE OWNER. ALL EQUIPMENT SHALL BE TESTED UNDER NORMAL OPERATION. THE OWNER SHALL PROVIDE THE FUEL FOR THE TESTS. CONTRACTOR SHALL HAVE AN ASO AND AN ELECTRICIAN DURING THE OPENING TO HANDLE ANY REQUIRED ADJUSTMENTS TO THE EQUIPMENT. START-UP OF THE TANK MONITORING SYSTEMS SHALL BE BY MANUFACTURER'S TECHNICIANS.
8. CONTRACTOR SHALL MAINTAIN THE WORK AREA CLEAN. TRASH AND WASTE MATERIAL SHALL BE COLLECTED AT A SAFE POINT AWAY FROM FLAMES OR OTHER FIRE SOURCES. CONTRACTOR SHALL PREVENT ANY LEAKS OR DRIPS OF HYDRAULIC FLUID, MOTOR OIL, MOTOR FUELS, SOLVENTS AND OTHER HYDROCARBONS FROM CONTAMINATING THE GROUND. SUCH SPILLS SHALL BE IMMEDIATELY SOAKED IN OIL DRY AND REMOVED FROM THE SITE IN AN APPROVED MANNER. TRASH SHALL BE DISPOSED OF DAILY UNLESS A COVERED DUMPSTER IS PROVIDED AND ITS LOCATION APPROVED BY A THE OWNER'S CONSTRUCTION MANAGER.
9. AFTER ALL WORK HAS BEEN COMPLETED AND THE PROJECT TESTED AND ACCEPTED, THE CONTRACTOR SHALL SWEEP CLEAN THE ENTIRE WORK AREA AND REMOVE ALL TRASH, WASTE MATERIAL, ASSOCIATED EQUIPMENT AND VEHICLES. ANY DAMAGED PARKING STRIPES OR STAINED PAVEMENT SHALL BE REFINISHED TO ITS ORIGINAL CONDITION.

VICINITY MAP
N.T.S.

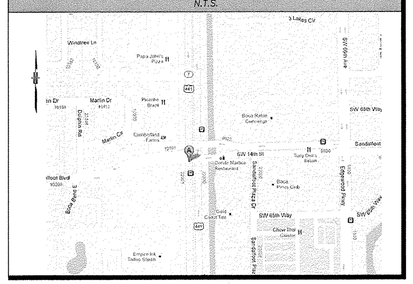

SHEET INDEX

COVER SHEET	00
PROPOSED SITE PLAN	SP-01
EQUIPMENT AND PARTS LIST	F-1
TANK APRON PLAN, SECTIONS AND DETAILS	F-2
TANK ANCHORINGPLAN, SECTIONS AND DETAILS	F-3
TYPICAL DISPENSER DETAILS AND FACITLITY SIGNAGE	F-4
GENERAL ARRANGEMENT DISPENSER AND TANK AREA	F-5
TANK TOP FITTINGS AND PIPING UST PLANS, SECTIONS AND DETAILS	F-6
TANK TOP FITTINGS SECTION AND DETAILS	F-7
TANK TOP FITTINGS SECTION AND DETAILS	F-7A
TANK TOP FITTINGS AND PIPING UST PLANS, SECTIONS AND DETAILS	F-8
DISPENSER AND TANK APRON EQUIPMENT AND CONDUIT PLAN	F-9
DISPENSER AND TANK ELECTRICAL PLANS, SECTIONS AND DETAILS	F-10
TYPICAL CIVIL DESIGN, CONSTRUCTION NOTES, ELECTRICAL NOTES AND WIRING SPECIFICATIONS	F-11
MECHANICAL NOTES AND SPECIFICATIONS, AND START-UP AND CALIBRATION NOTES	F-12

CLOSE-OUT DOCUMENTS

THE FOLLOWING DOCUMENTS ARE TO BE TURNED OVER TO CUMBERLAND FARMS CONSTRUCTION MANAGER AT PUNCH LIST:

1. COPY OF SIGNED CHECK LIST PROVIDED BY UST TRANSPORTER.
2. COPY OF SIGNED INSTALLATION CHECK LIST PROVIDED IN UST INSTALLATION MANUAL.
3. COMPLETED COPY OF VEEDER-ROOT MONITORING SYSTEMS WARRANTY REGISTRATION AND CHECK OUT FORM.
4. COPY OF DISPENSER CALIBRATION REPORT.
5. ONE YEAR WARRANTY LETTER.
6. NOTARIZED FINAL LIEN WAIVER.
7. COMPLETED UST PROFILE FORM.
8. SUBCONTRACTOR'S LIST.
9. EXECUTED CERTIFICATE OF OCCUPANCY.
10. COPY OF TANK / PIPING TIGHTNESS TESTS. STAGE II TEST UST REGISTRATION FORMS.
11. COMPLETED PUNCH LIST SIGNED BY CUMBERLAND FARMS CONSTRUCTION MANAGER.
12. SUMMARY OF TEST RESULTS SIGNED BY BOTH GENERAL CONTRACTOR AND TANK INSTALLER.
13. VEEDER-ROOT OPERATOR'S QUICK HELP GUIDE.

Rev. #	Date	Description

CUMBERLAND FARMS, INC

CUMBERLAND FARMS, INC # V-0636
22905 S.R.7, BOCA RATON, FL.
SECTION 25, TOWNSHIP 47 S., RANGE 41 E.
COVER

Cumberland FARMS
CUMBERLAND FARMS INC.
100 CROSSING BLVD
FRAMINGHAM, MA 01702

CORE STATES GROUP
1700 Industrial Drive, Suite B
Rogers, AR 72756
Phone: (479) 986-4400
FAX (479) 986-4401

Job#:	CFI-12653
Scale:	AS NOTED
Date:	10-12-12
Drawn By:	WLJ
Checked By:	RGS

Documents prepared by Core States Group are to be used only for the specific project and purpose for which they are intended. Any extension of use to other projects, by owner or any other party, without the express written consent of Core States Group is done at the user's own risk. If used in a way other than that for which they are intended, the user will hold Core States Group harmless from all claims and losses.

DAVID M. LEIFFER
LICENSE
No. 68170
STATE OF FLORIDA
PROFESSIONAL ENGINEER

DAVID M. LEIFFER
P.E.# 68170
NOV 01 2012

COVER

Drawing: C:\Users\jferguson\appdata\local\temp\AcPublish_1928\1-COVER.dwg Layout

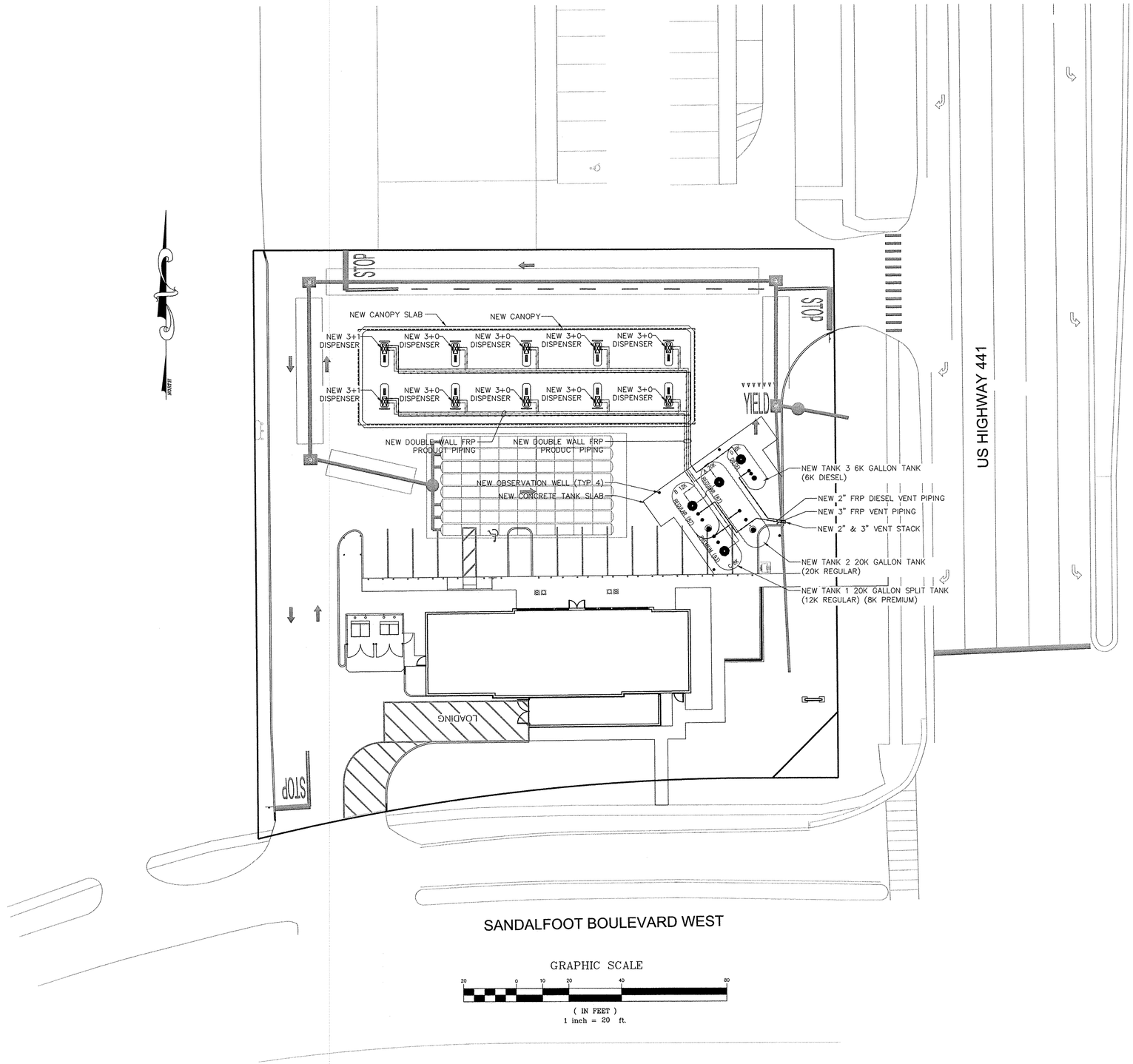

GENERAL NOTES

1. APPLICANT: CUMBERLAND FARMS, INC.
777 DEDHAM STREET
CANTON, MA 02021

2. BOUNDARY AND TOPOGRAPHIC INFORMATION TAKEN FROM A SURVEY PLAN ENTITLED "TOPOGRAPHIC SURVEY PORTION OF SECTION 12-44-42 PALM BEACH COUNTY FLORIDA" PREPARED BY BLOOMSTER PROFESSIONAL LAND SURVEYORS. DATED 2-14-00, SCALE: 1"=20'.

3. IT IS THE RESPONSIBILITY OF THE CONTRACTOR TO REVIEW ALL OF THE DRAWINGS AND SPECIFICATIONS ASSOCIATED WITH THIS PROJECT WORKSCOPE PRIOR TO THE INITIATION OF CONSTRUCTION. SHOULD THE CONTRACTOR FIND A CONFLICT WITH THE DOCUMENTS, RELATIVE TO THE SPECIFICATIONS OR APPLICABLE CODES, IT IS THE CONTRACTOR'S RESPONSIBILITY TO NOTIFY THE PROJECT ENGINEER OF RECORD IN WRITING PRIOR TO THE START OF CONSTRUCTION. FAILURE BY THE CONTRACTOR TO NOTIFY THE PROJECT ENGINEER SHALL CONSTITUTE ACCEPTANCE OF FULL RESPONSIBILITY BY THE CONTRACTOR TO COMPLETE THE SCOPE OF WORK AS DEFINED BY THE DRAWINGS AND IN FULL CONFORMANCE WITH LOCAL REGULATIONS AND CODES.

4. ALL WORK SHALL CONFORM TO PASCO COUNTY AND THE STATE OF FLORIDA DEPARTMENT OF TRANSPORTATION CONSTRUCTION STANDARDS AS APPLICABLE.

5. ALL SITE WORK INCLUDING CONCRETE MATS AND PAVING SHALL BE CONSTRUCTED IN ACCORDANCE WITH CUMBERLAND FARMS, INC. SPECIFICATIONS.

6. ALL UNDERGROUND TANK AND PIPING INSTALLATION SHALL CONFORM TO THE REQUIREMENTS OF THE DISPENSER AND PIPING MANUFACTURERS AND PASCO COUNTY AND ALL APPLICABLE STATE, FEDERAL AND LOCAL REGUALTIONS.

7. UNDERGROUND STORAGE TANKS, PIPING, AND SYSTEM COMPONENTS SHALL BE INSTALLED IN ACCORDANCE WITH ALL APPLICABLE CODES AND REGULATIONS BY A LICENSED CONTRACTOR CERTIFIED FOR SUCH INSTALLATION BY THE TANK AND PIPING MANUFACTURER. ALL INSTALLATION DETAILS SHALL BE IN ACCORDANCE WITH MANUFACTURING DETAILS FOR ALL TANK AND SYSTEM COMPONENTS.

8. LOCATION OF ALL EXISTING AND PROPOSED SERVICES ARE APPROXIMATE AND MUST BE CONFIRMED INDEPENDENTLY WITH LOCAL UTILITY COMPANIES PRIOR TO COMMENCEMENT OF ANY CONSTRUCTION OR EXCAVATION. ALL UTILITY SERVICE CONNECTION POINTS SHALL BE CONFIRMED INDEPENDENTLY BY THE CONTRACTOR IN THE FIELD PRIOR TO THE COMMENCEMENT OF CONSTRUCTION.

9. ALL UTILITY LOCATIONS ARE APPROXIMATE. IT IS THE RESPONSIBILITY OF THE CONTRACTOR TO LOCATE CONDUITS, PRODUCT PIPING, ETC. PRIOR TO COMMENCEMENT OF EXCAVATION OF ANY TYPE.

10. ANY EXISTING TANKS, PIPING OR OTHER EQUIPMENT TO BE REMOVED, SHALL BE DISPOSED OF IN ACCORDANCE WITH ALL FEDERAL, STATE AND LOCAL CODES AND REGULATIONS.

11. ALL EXCAVATED UNSUITABLE MATERIAL MUST BE TRANSPORTED TO AN APPROVED DISPOSAL LOCATION.

12. IT SHALL BE THE CONTRACTOR'S RESPONSIBILITY TO NOTIFY "CALL SUNSHINE" (1-800-432-4770) 48 HOURS PRIOR TO ANY EXCAVATION ON THIS SITE. CONTRACTOR SHALL ALSO NOTIFY LOCAL WATER & SEWER DEPARTMENTS TO MARK OUT THEIR UTILITIES.

13. CONTRACTOR SHALL OBTAIN PROPER TRADE PERMITS. IT IS THE RESPONSIBILITY OF THE CONTRACTOR TO NOTIFY THE FIRE AND BUILDING DEPARTMENT 48 HOURS PRIOR TO COMMENCEMENT OF CONSTRUCTION.

14. THE LIMITS OF WORK SHALL BE CLEARLY MARKED IN THE FIELD PRIOR TO THE START OF CONSTRUCTION OR SITE CLEARING.

15. ALL CONCRETE AND BITUMINOUS PATCH AREAS TO MATCH EXISTING GRADES.

16. ALL WORK IS TO BE PERFORMED IN ACCORDANCE WITH O.S.H.A. REQUIREMENTS.

17. SOLID WASTE TO BE DISPOSED OF BY CONTRACTOR IN ACCORDANCE WITH ALL LOCAL, STATE AND FEDERAL REGULATIONS.

18. CONTRACTOR IS RESPONSIBLE FOR ALL EXCAVATION TO BE PERFORMED IN ACCORDANCE WITH CURRENT OSHA STANDARDS, AS WELL AS ADDITIONAL PROVISIONS TO ASSURE STABILITY OF CONTIGUOUS STRUCTURES.

19. ANY REPRODUCTION OF THIS ENGINEERED DOCUMENT WITHOUT THE PRIOR CONSENT OF THE "ENGINEER OF RECORD" IS STRICTLY PROHIBITED.

20. IN CASE OF DISCREPANCIES BETWEEN PLANS, THE SITE PLAN WILL SUPERCEDE IN ALL CASES. NOTIFY THE ENGINEER OF RECORD OF ANY CONFLICTS.

NOTE:
CONTRACTOR TO COORDINATE WITH CUMBERLAND CONSTRUCTION MANAGER PRIOR TO ORDERING NEW FUELING SYSTEM PARTS.

IMPORTANT NOTE:

CONTRACTOR IS TO ENSURE ALL EXISTING UTILITIES ARE LOCATED AND MARKED PRIOR TO ANY DEMOLITION, CONSTRUCTION OR EXCAVATION ON THE SITE.

REFER TO CANOPY FRAMING PLAN AND FOUNDATION PLAN BY CANOPY MANUFACTURER FOR CANOPY DRAIN DETAILS.

CONTRACTOR TO VERIFY PIPE ANGLES AND ALIGNMENT IN THE FIELD.

Rev. #	Date	Description

CUMBERLAND FARMS, INC

CUMBERLAND FARMS, INC # V-0636
22905 S.R.7, BOCA RATON, FL.
SECTION 25, TOWNSHIP 47 S., RANGE 41 E.
PROPOSED SITE PLAN

Cumberland FARMS
CUMBERLAND FARMS INC.
100 CROSSING BLVD.
FRAMINGHAM, MA 01702

CORE STATES GROUP
1700 Industrial Drive, Suite B
Rogers, AR 72758
Phone (479) 986-4400
FAX (479) 986-440

Job#:	CFI-12653
Scale:	AS NOTED
Date:	10-12-12
Drawn By:	WLJ
Checked By:	RGS

Documents prepared by Core States Group are to be used only for the specific project and specific use for which they were intended. Any extension of use to other projects, by owner or any other party, without the express written consent of Core States Group is done at the user's own risk. If used in a way other than that specifically intended, user shall hold Core States Group harmless from all claims and losses.

DAVID M. LEIFFER LICENSED No. 68170 STATE OF FLORIDA PROFESSIONAL ENGINEER

DAVID M. LEIFFER
P.E.# 68170
NOV 01 2012

SP-01

Drawing: M:\Cumberland Farms 2012\Boca Raton, FL\dwgs\12-SP01.dwg Layout

001 EQUIPMENT AND PARTS LIST

CIVIL EQUIPMENT

	EQUIPMENT DESCRIPTION	PROVIDED	INSTALLED	QUANTITY
C-01	Tank Hold Down Straps	Owner	Contractor	F.V.-F.D.
C-02	Turnbuckle TB -3418	Owner	Contractor	F.V.-F.D.
C-03	Concrete DeadMan, Pre-Cast SEE DRAWING F-3 FOR DETAILS)	Owner	Contractor	F.V.-F.D.
C-04	dispenser Canopy, including Canopy columns, Decking, Fascia and Structure.	-	-	F.V.-F.D.
C-05	Canopy Column Anchor Bolts A307 sized as per Lane Supply Inc.	-	-	F.V.-F.D.
C-06	Dispenser Apron reinforced concrete FOR TRENCHES	Contractor	Contractor	F.V.-F.D.
C-07	BECO 24"x9 3/4"x6 1/4" CABINET (WHITE)	Owner	Contractor	F.V.-F.D.
C-08	ABC Fire Extinguisher (10lb)	Owner	Contractor	F.V.-F.D.
C-09	FUEL ISLANDS - 4' x 12' x 13" DEEP	Owner	Contractor	F.V.-F.D.
C-10	STANDARD STEEL BUMPER - 44" x 53"	Owner	Contractor	F.V.-F.D.
C-11				
C-12	EXPANSION JOINT WITH BACKER ROD AND FILL WITH SIKAFLEX 1CSL CAULKING.	Contractor	Contractor	F.V.-F.D.
C-13	4' x 4' x 2" Rigid Styrofoam Board	Contractor	Contractor	F.V.-F.D.
C-14	TRASH CAN	Owner	Contractor	F.V.-F.D.
C-15	GALVANIZED CULVERT (GRAVEL GUARD FOR TANK SUMPS)	Owner	Contractor	F.V.-F.D.

MECHANICAL EQUIPMENT

	EQUIPMENT DESCRIPTION	PROVIDED	INSTALLED	QUANTITY
M-01	CONTAINMENT SOLUTIONS MODEL (10') - 20,000 GALLON SPLIT TANK (12K REGULAR) (8K PREMIUM) DW FRP BRINE MONITORED	Owner	Contractor	F.V.-F.D.
M-02	CONTAINMENT SOLUTIONS MODEL (10') - 20,000 GALLON TANK (20K REGULAR) DW FRP BRINE MONITORED	Owner	Contractor	F.V.-F.D.
M-03	TANK STICK (16' Lg. GAUGE STICK) BY B&K TANK GAUGE COMPANY	Owner	Contractor	F.V.-F.D.
M-04	CONTAINMENT SOLUTIONS TANK SUMP (SW -PTE-WT-42)	Owner	Contractor	F.V.-F.D.
M-05	FE PETRO 2HP IST SUBMERSIBLE PUMPS W/15" RISER (STPVSV2VL2)	Owner	Contractor	F.V.-F.D.
M-06	FE PETRO VFC FREQUENCY CONTROLLER (587420400)	Owner	Contractor	F.V.-F.D.
M-07	FE PETRO STP-MLD MECHANICAL LEAK DETECTOR (400500901) EQ-335	Owner	Contractor	F.V.-F.D.
M-08	FE PETRO SIPHON CHECK VALVE ASY. (400137901)	Owner	Contractor	F.V.-F.D.
M-09	WAYNE OVATION B12 GASOLINE BLENDER DISPENSERS - 3+0 GASOLINE	Owner	Contractor	F.V.-F.D.
M-10	BRAVO DISPENSER SUMP (B-9000-EOCF-05)	Owner	Contractor	F.V.-F.D.
M-11	WAYNE OVATION B23 GASOLINE BLENDER DISPENSER - 3+1 GASOLINE/DIESEL	Owner	Contractor	F.V.-F.D.
M-12	STABILIZER SHEAR VALVE BRACKET	Owner	Contractor	F.V.-F.D.
M-13	OPW 66CAS-0300 VAPOR ASSIST BREAKAWAY	Owner	Contractor	F.V.-F.D.
M-14	OPW 12VW-0469 NEW VAPOR ASSIST NOZZLE	Owner	Contractor	F.V.-F.D.
M-15	DAYCO 7246BVX-72 VAPOR ASSIST 6FT. HOSE ASY.	Owner	Contractor	F.V.-F.D.
M-16	DAYCO 7246BVX-12 VAPOR ASSIST 1FT. HOSE ASY.	Owner	Contractor	F.V.-F.D.
M-17	-	-	-	
M-18	OPW 431S-1000 3/4" VAPOR HOSE END SWIVEL	Owner	Contractor	F.V.-F.D.
M-19	SMITH FIBERCAST PRIMARY (2") PIPE	Owner	Contractor	F.V.-F.D.
M-20	SMITH FIBERCAST CONTAINMENT (3") PIPE	Owner	Contractor	F.V.-F.D.
M-21				
M-22				
M-23				
M-24				
M-25	ENVIRON CONDUIT (3/4") BULKHEAD (FEB-3075)	Owner	Contractor	F.V.-F.D.
M-26	ENVIRON CONDUIT (1") BULKHEAD (FEB-3100)	Owner	Contractor	F.V.-F.D.
M-27	ENVIRON CONDUIT (2") BULKHEAD (FEB-2100)	Owner	Contractor	F.V.-F.D.
M-28				
M-29	SMITH FIBERCAST RIGID FRP BONDED TO SUMP (3")	Owner	Contractor	F.V.-F.D.
M-30	OPW 10BHMP-5830 DOUBLE POPPET FEMALE SHEAR VALVES	Owner	Contractor	F.V.-F.D.
M-31	OPW 60VSP-1001 STAGE II SHEAR VALVE	Owner	Contractor	F.V.-F.D.
M-32	OPW 60VK-1002 STAGE II SHEAR VALVE U-BOLT MOUNTING KIT	Owner	Contractor	F.V.-F.D.
M-33	HOSEMASTER FSMS 2"M X 2"M X 18"L "FIRESAFE" FLEX CONNECTOR W/SWIVEL	Owner	Contractor	F.V.-F.D.
M-34	HOSEMASTER FSMM 1-1/2"M X 1-1/2"M X 18"L "FIRESAFE" FLEX CONNECTOR NO-SWIVEL	Owner	Contractor	F.V.-F.D.
M-35	HOSEMASTER FSMS 2"M X 2"M X 30"L "FIRESAFE" FLEX CONNECTOR W/SWIVEL	Owner	Contractor	F.V.-F.D.
M-36	HOSEMASTER FSMM 1-1/2"M X 1-1/2"M X 30"L "FIRESAFE" FLEX CONNECTOR NO-SWIVEL	Owner	Contractor	F.V.-F.D.
M-37	FIBRELITE FL-42 MANHOLE WITH FRAME FL42-COLOR (2-WHITE, 1-GREEEN & 1 RED)	Owner	Contractor	F.V.-F.D.
M-38	FIBRELITE FL-SKIRT AND HARDWARE FOR 42" MANHOLE (FL42-FRAME-S & FL42-109K-90)	Owner	Contractor	F.V.-F.D.
M-39	FIBRELITE FL-7 HANDLE ASY.	Owner	Contractor	F.V.-F.D.
M-40	OPW - MODEL 1SC-2115 FILL SEALABLE	Owner	Contractor	F.V.-F.D.
M-41	OPW - MODEL 1SC-2100 SEALABLE COVER SPILL CONTAINER	Owner	Contractor	F.V.-F.D.
M-42	FAIRFIELD STANDARD (18") MANHOLE (180-8) EQ-052	Owner	Contractor	F.V.-F.D.
M-43	OPW TAG - 1010 WHITE BUCKET TAG	Owner	Contractor	F.V.-F.D.
M-44	OPW TAG - 7010 ORANGE BUCKET TAG	Owner	Contractor	F.V.-F.D.
M-45	OPW TAG - 3010 RED BUCKET TAG	Owner	Contractor	F.V.-F.D.
M-46	OPW TAG - 1000 WHITE COVER TAG	Owner	Contractor	F.V.-F.D.
M-47	OPW TAG - 7000 ORANGE COVER TAG	Owner	Contractor	F.V.-F.D.
M-48	OPW TAG - 3000 RED COVER TAG	Owner	Contractor	F.V.-F.D.
M-49				
M-50	EVERTITE 4" ADAPTER (97AGM-4)	Owner	Contractor	F.V.-F.D.
M-51	OPW 634TT-7085 GREY 4" ADAPTER CAP	Owner	Contractor	F.V.-F.D.
M-52	OPW 1611AV-1620 STAGE II SWIVEL ADAPTER	Owner	Contractor	F.V.-F.D.
M-53	OPW 1711T-7085 ORANGE STAGE II ADAPTER CAP 3"	Owner	Contractor	F.V.-F.D.
M-54	OPW 233V-4420 VENT VALVE EXTRACTOR 4 X 4 X2	Owner	Contractor	F.V.-F.D.
M-55	OPW 53VML-0160 BALL FLOAT VENT VALVE (16") LONG EQ-223	Owner	Contractor	F.V.-F.D.
M-56	OPW 623-0032 (?) P/V VENT CAP	Owner	Contractor	F.V.-F.D.
M-57	2" WEBB FULL PORT BALL VALVE (CON-64-108-01)	Owner	Contractor	F.V.-F.D.
M-58	2" FRP Piping	Contractor	Contractor	F.V.-F.D.
M-59	2" Dia FRP 90 Elbow (soc x soc)	Contractor	Contractor	F.V.-F.D.

* DENOTES:
CALCULATED LENGTHS INCLUDE 10% ALLOWANCE AND ARE BASED ON THE LOCATION OF THE TANKS INDICATED ON THE SITE PLAN.
THE PIPE LENGTHS INDICATED ARE GIVEN TO PROVIDE THE CONTRACTOR WITH AN ESTIMATE ONLY.
ACTUAL PIPE LENGTHS MAY VARY BASED ON FINAL LOCATION OF THE TANKS.
EQ - DENOTES FLORIDE DEPARTMENT OF ENVIRONMENTAL PROTECTION APPROVED STORAGE TANK SYSTEM EQUIPMENT.

MECHANICAL EQUIPMENT

	EQUIPMENT DESCRIPTION	PROVIDED	INSTALLED	QUANTITY
M-60	2" Dia FRP 45 Elbow	Contractor	Contractor	F.V.-F.D.
M-61	2" spigot x female npt Adaptor	Contractor	Contractor	F.V.-F.D.
M-62	2" Dia Galv. Steel Pipe	Contractor	Contractor	F.V.-F.D.
M-63	2" Dia Galv. Steel Union	Contractor	Contractor	F.V.-F.D.
M-64	2" Dia Galv. Steel 90 Elbow	Contractor	Contractor	F.V.-F.D.
M-65	2" Dia. Galv. Steel 45 Elbow	Contractor	Contractor	F.V.-F.D.
M-66	2" Dia. Galv. Steel coupling	Contractor	Contractor	F.V.-F.D.
M-67	Galvanized Steel 2" NPT Threaded Cap	Contractor	Contractor	F.V.-F.D.
M-68	3" FRP Pipe	Contractor	Contractor	F.V.-F.D.
M-69	3" FRP 90 Elbow	Contractor	Contractor	F.V.-F.D.
M-70	3" FRP Tee	Contractor	Contractor	F.V.-F.D.
M-71	3"x2" FRP Reduser	Contractor	Contractor	F.V.-F.D.
M-72	3" FRP spigot x male npt Adaptor	Contractor	Contractor	F.V.-F.D.
M-73	3" FRP Bell x male npt Adaptor	Contractor	Contractor	F.V.-F.D.
M-74	3" Galv Steel Pipe	Contractor	Contractor	F.V.-F.D.
M-75	3" Galv. Steel Coupling	Contractor	Contractor	F.V.-F.D.
M-76	3" Dia. Galv. Steel 90 Elbow	Contractor	Contractor	F.V.-F.D.
M-77	3" Galvanized Steel pipe cap npt	Contractor	Contractor	F.V.-F.D.
M-78	3" Galvanized Steel u-bolts	Contractor	Contractor	F.V.-F.D.
M-79	4" Galv. Riser - Length as Required	Contractor	Contractor	F.V.-F.D.
M-80	4" PVC pipe - Length as Required	Contractor	Contractor	F.V.-F.D.
M-81	6" PVC pipe - Length as Required	Contractor	Contractor	F.V.-F.D.
M-82	2" GALV. STEEL TEE	Contractor	Contractor	F.V.-F.D.
M-83	FAIRFIELD MONITORING MANHOLE 8" (80MW-12)	Owner	Contractor	F.V.-F.D.
M-84	OPW 62PMC LOCKABLE MONITORING CAP	Owner	Contractor	F.V.-F.D.
M-85	4"ø SLOTTED (.010") PVC PIPE	Owner	Contractor	F.V.-F.D.
M-86	4"ø SCH. 40 PVC SLIP-ON CAP	Contractor	Contractor	F.V.-F.D.
M-87	1 1/2" WEBB FULL PORT BALL VALVE (CON-64-107-01)	Owner	Contractor	F.V.-F.D.
M-88	1 1/2" WEBB UNION 150 LB (UNION-1 1/2-150-G)	Owner	Contractor	F.V.-F.D.
M-89	2" WEBB UNION 300 LB (UNION-2IN-G300)	Owner	Contractor	F.V.-F.D.
M-90	2" WEBB UNION 90° ELBOW (ELUNION-2x90D)	Owner	Contractor	F.V.-F.D.
M-91	GLUE KIT	Owner	Contractor	F.V.-F.D.
M-92	2" FRP Bell x male npt Adaptor	Contractor	Contractor	F.V.-F.D.
M-93	OPW 61SO-4010 OVERFILL DROP TUBES (FOR 10') EQ-223	Owner	Contractor	F.V.-F.D.
M-94				
M-95				
M-96				
M-97				
M-98				
M-99				
M-100	CONTAINMENT SOLUTIONS MODEL (8') - 6,000 GALLON TANK (6K DIESEL) DW FRP BRINE MONITORED	Owner	Contractor	F.V.-F.D.
M-101	OPW TAG - 4010 YELLOW BUCKET TAG	Owner	Contractor	F.V.-F.D.
M-102	OPW TAG - 4000 YELLOW COVER TAG	Owner	Contractor	F.V.-F.D.
M-103	OPW 66REC-1000 3/4" RECONNECTABLE BREAKAWAY	Owner	Contractor	F.V.-F.D.
M-104	OPW 241-TPS-0241 BALL SWIVEL	Owner	Contractor	F.V.-F.D.
M-105	GOODYEAR 532-327-712-4004-69 3/4" FLEXSTEEL 4 FOOT HOSE w/FITTINGS	Owner	Contractor	F.V.-F.D.
M-106	GOODYEAR 532-327-712-4008-69 3/4" FLEXSTEEL 8 FOOT HOSE w/FITTINGS	Owner	Contractor	F.V.-F.D.
M-107	OPW 11B-0100 STANDARD FLOW DIESEL NOZZLE w/ HOLD OPEN CLIP (GREEN)	Owner	Contractor	F.V.-F.D.
M-108	OPW 8G - 0100 "FILLGARD" SPLASH GUARD (GREEN)	Owner	Contractor	F.V.-F.D.
M-109				
M-110				
M-111	CONTAINMENT SOLUTIONS MODEL (6') - 6,000 DW FRP DRY MONITORED	Owner	Contractor	F.V.-F.D.

ELECTRICAL EQUIPMENT

	EQUIPMENT DESCRIPTION	PROVIDED	INSTALLED	QUANTITY
E-01	VEEDER-ROOT CONSOLE EQ-197	Owner	Contractor	F.V.-F.D.
E-02	VEEDER-ROOT CONTAINMENT SUMP SENSOR - #794380-208	Owner	Contractor	F.V.-F.D.
E-03	VEEDER-ROOT UNIVERSAL SENSOR MOUNTING KIT - #330020-021	Owner	Contractor	F.V.-F.D.
E-04	VEEDER-ROOT INTERSTITIAL SENSOR - #794390-407	Owner	Contractor	F.V.-F.D.
E-05	V/R 8-INPUT INTERSTITIAL/LIQUID SENSOR INTERFACE MODULE - #329358-001	Owner	Contractor	F.V.-F.D.
E-06	VEEDER-ROOT MAG 1 PROBE FOR TANK MONITORING - #847390-xxx	Owner	Contractor	F.V.-F.D.
E-07	VEEDER-ROOT GAS PROBE FLOAT KIT - #849600-000	Owner	Contractor	F.V.-F.D.
E-08	MORRISON CAP AND RING KIT (MAG PROBES) - #305XPA-0200	Owner	Contractor	F.V.-F.D.
E-09	VEEDER-ROOT 4-INPUT PROBE INTERFACE MODULE - #847490-102	Owner	Contractor	F.V.-F.D.
E-10	JUNCTION BOX (WP OR XP) FOR XP INSTALLATIONS USE CROUSE HINDS GUP215 OR EQUIVALENT	Contractor	Contractor	F.V.-F.D.
E-11	UNION (SIZE AS REQUIRED)	Contractor	Contractor	F.V.-F.D.
E-12	CONDUIT SEAL FITTING (SIZE AS REQUIRED)	Contractor	Contractor	F.V.-F.D.
E-13	VEEDER-ROOT DIESEL PROBE FLOAT KIT - #849600-001	Owner	Contractor	F.V.-F.D.
E-14				
E-15	LSI SCOTSDALE CANOPY FIXTURE MODEL # SC-S-250-PSMV-PG	Contractor	Contractor	F.V.-F.D.
E-16	LSI ENCORE FOCUS LIGHTING FIXTURE EC-SP-100-PAR38-FO	Contractor	Contractor	F.V.-F.D.
E-17				
E-18				
E-19				

NOTE:
SCHEDULES CONTAIN CUMBERLAND STANDARD PARTS, ALL PARTS MAY NOT BE REQUIRED. CONTRACTOR TO FIELD VERIFY EXISTING FUELING SYSTEM AND COORDINATE WITH CUMBERLAND CONSTRUCTION MANAGER PRIOR TO ORDERING.

Rev. #	Date	Description

CUMBERLAND FARMS, INC

CUMBERLAND FARMS, INC # V-0636
22905 S.R.7, BOCA RATON, FL
SECTION 25, TOWNSHIP 47 S., RANGE 41 E.
EQUIPMENT AND PART LIST

Cumberland FARMS
CUMBERLAND FARMS INC.
100 CROSSING BLVD.
FRAMINGHAM, MA 01702

CORE STATES GROUP
1700 Industrial Drive, Suite B
Rogers, AR 72756
Phone (479) 936-4400
FAX (479) 936-4401

Job#: CFI-12653
Scale: AS NOTED
Date: 10-12-12
Drawn By: WLJ
Checked By: RGS

Documents prepared by Core States Group are to be used only for the specific project and specific use for which they are intended. Any re-use, extension of use to other projects, by owner or any other party, without the express written consent of Core States Group, is at the user's own risk. If used in a way other than that specifically intended, user will hold Core States Group harmless from all claims and losses.

DAVID M. LEIFFER LICENSED No. 68170 STATE OF FLORIDA PROFESSIONAL ENGINEER
DAVID M. LEIFFER
P.E.# 68170

NOV 01 2012

F-1

Drawing: W:\Cumberland Farms 2012\Boca raton, FL\dwgs\3-Fldwg Layout

001 TANK TOP APRON

SCALE: 3/16" = 1'-0"

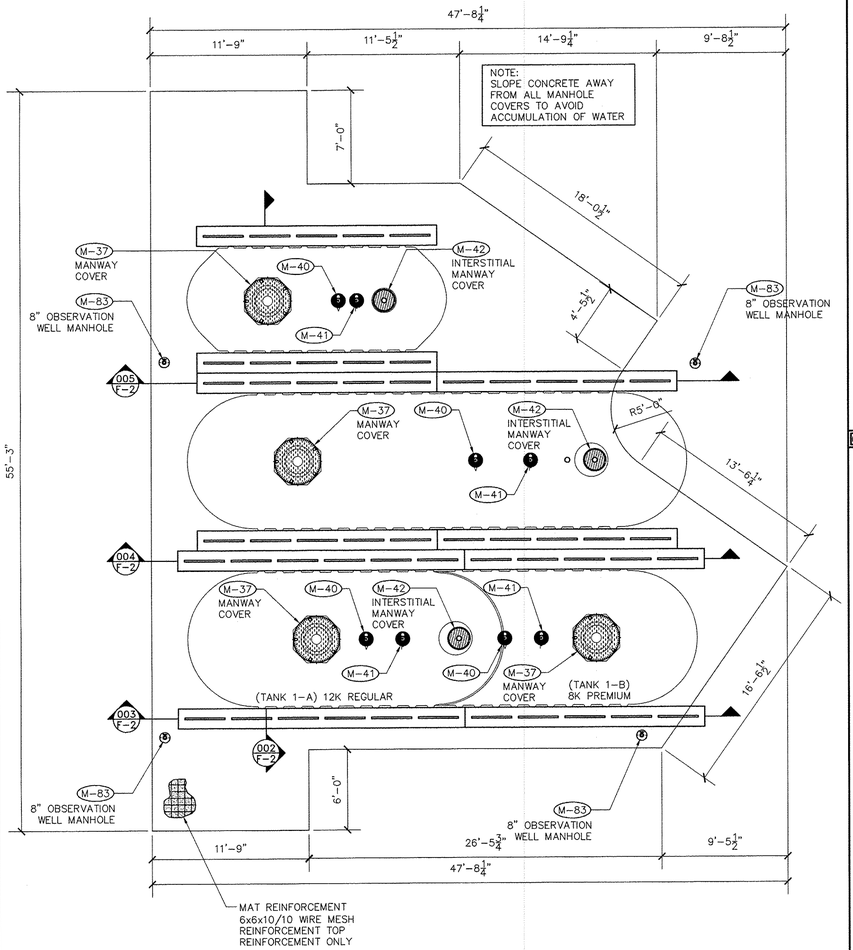

003 ELEVATION – 20,000 GALLON SPLIT 12,000/8,000 TANK 1

SCALE: 1/4" = 1'-0"

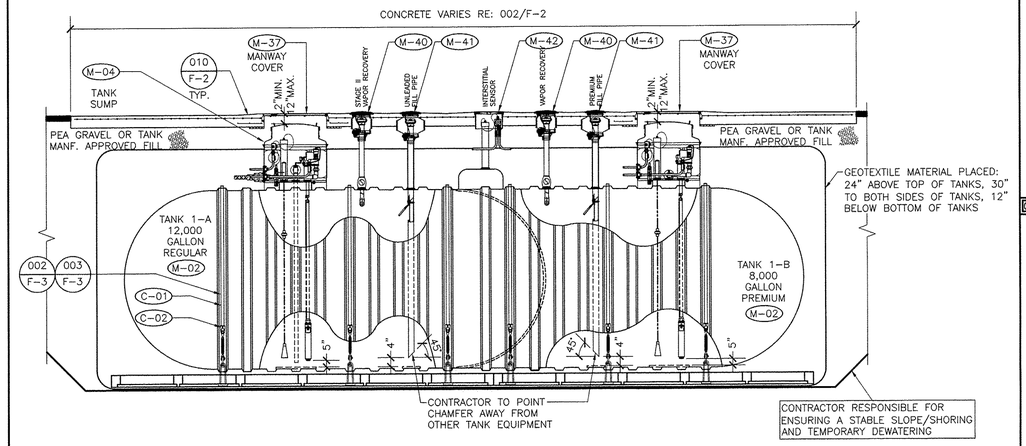

004 ELEVATION – 20,000 GALLON TANK 2

SCALE: 1/4" = 1'-0"

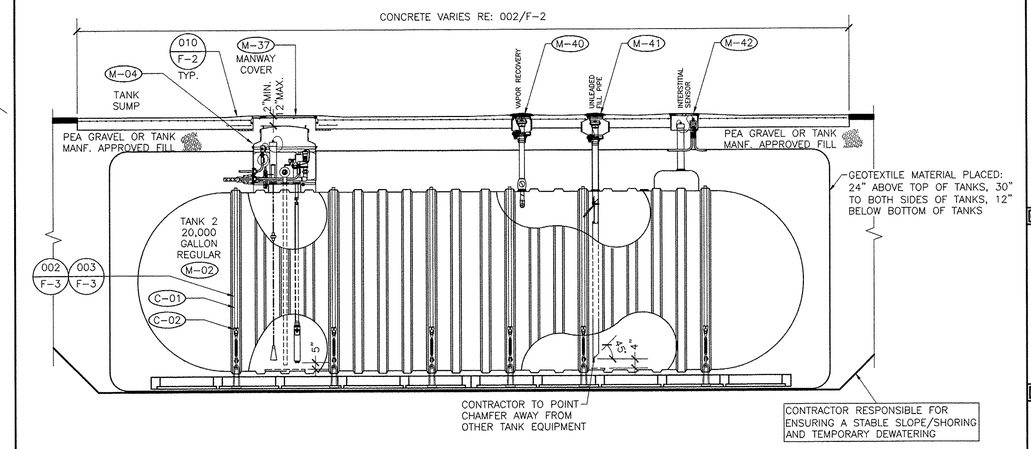

006 TYPICAL SAW CUT DETAIL

SCALE: 1 1/2" = 1'-0"

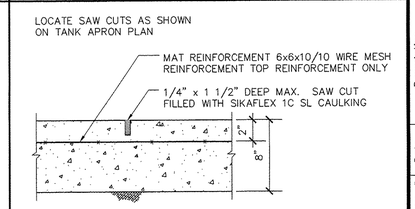

007 OBSERVATION WELL CONCRETE DETAIL

SCALE: 3/4" = 1'-0"

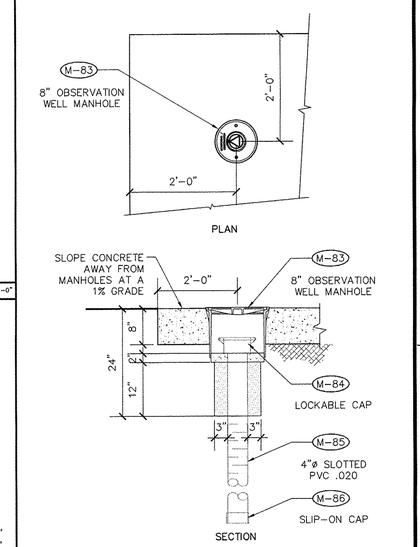

008 TYPICAL CROWNING DETAIL

SCALE: 1/2" = 1'-0"

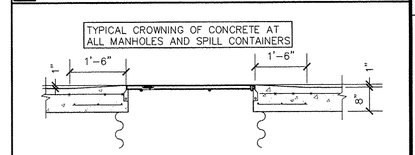

009 TYPICAL VENT CLUSTER SUPPORT DETAIL

SCALE: 1/2"=1'-0"

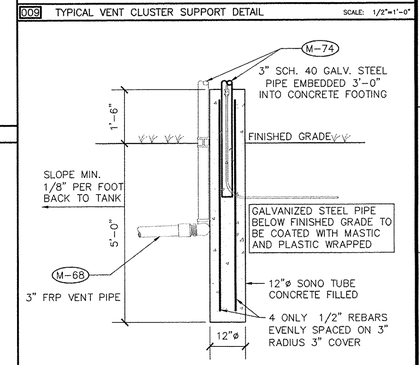

002 TANK CROSS SECTION

SCALE: 3/16"=1'-0"

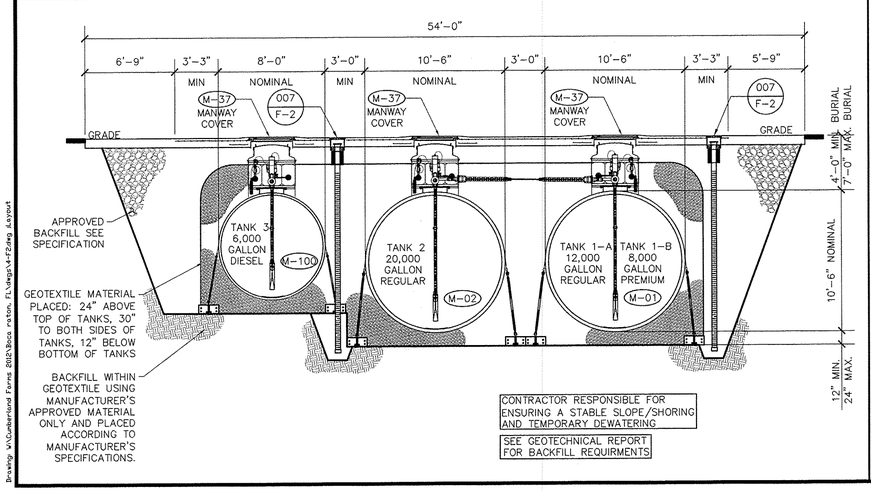

005 ELEVATION – 6,000 GALLON TANK 3

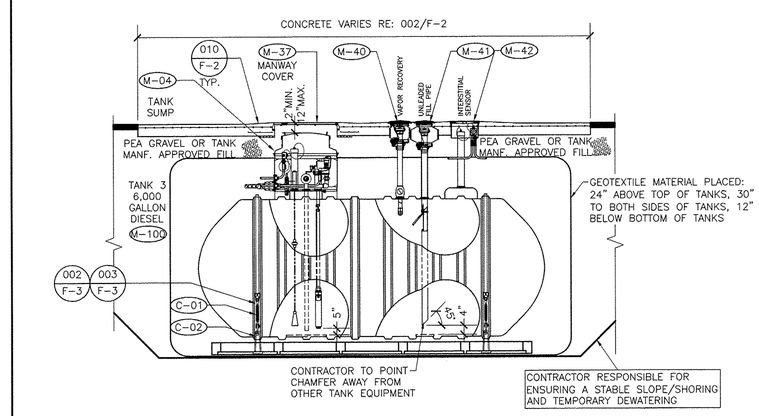

010 ADDITIONAL APRON REINFORCING AROUND MANHOLES

SCALE: 1 1/2"=1'-0"

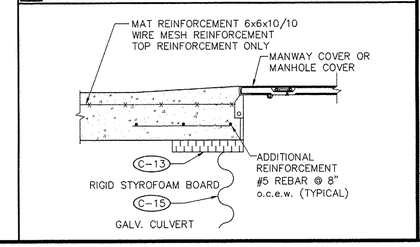

Rev. #	Date	Description

CUMBERLAND FARMS, INC

CUMBERLAND FARMS, INC # V-0636
22905 S.R.7, BOCA RATON, FL.
SECTION 25, TOWNSHIP 47 S., RANGE 41 E.
TANK APRON PLAN, SECTIONS AND DETAILS

Cumberland FARMS
CUMBERLAND FARMS INC.
100 CROSSING BLVD
FRAMINGHAM, MA 01702

CORE STATES GROUP
1700 Industrial Drive, Suite B
Rogers, AR 72756
Phone (479) 986-4400
FAX (479) 986-4401

Job#:	CFI-12653
Scale:	AS NOTED
Date:	10-12-12
Drawn By:	WLJ
Checked By:	RGS

Documents prepared by Core States Group are to be used only for the specific project and purpose for which they are intended. Any extension of use to other projects, by owner or any other party, without the express written consent of Core States Group is done at the user's own risk. If used in a way other than that specifically intended, the user shall indemnify and hold Core States Group harmless from all claims and losses.

DAVID M. LEIFFER LICENSE No. 68170 STATE OF FLORIDA PROFESSIONAL ENGINEER

DAVID M. LEIFFER
P.E.# 68170
NOV 01 2012

F-2

Drawing: V:\Cumberland Farms 0626\Boca raton, FL\dwgs\4-F2.dwg Layout

001 GENERAL ARRANGEMENT–ANCHORING DEADMEN

SCALE: 3/16" = 1'-0"

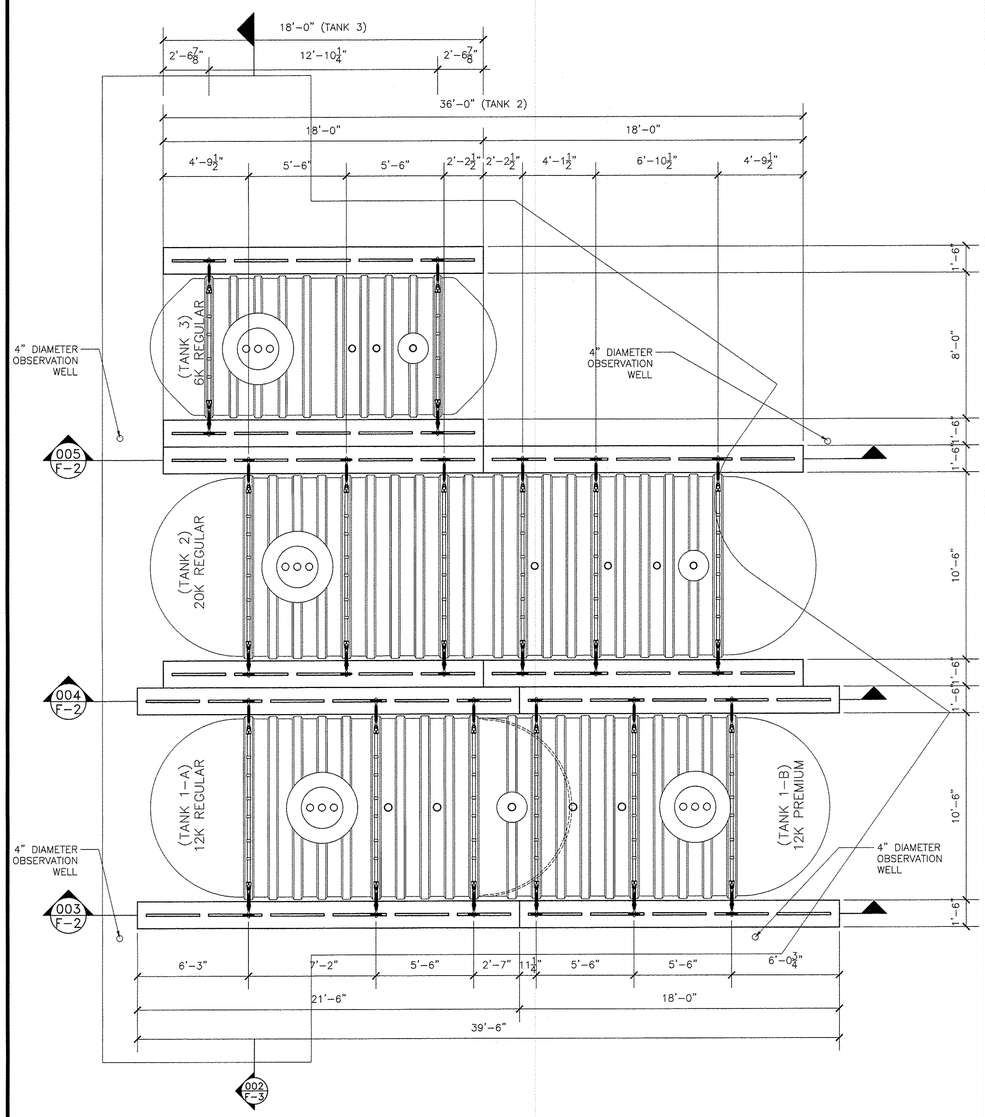

002 SECTION A–A TANK CROSS SECTION

SCALE: 1/4" = 1'-0"

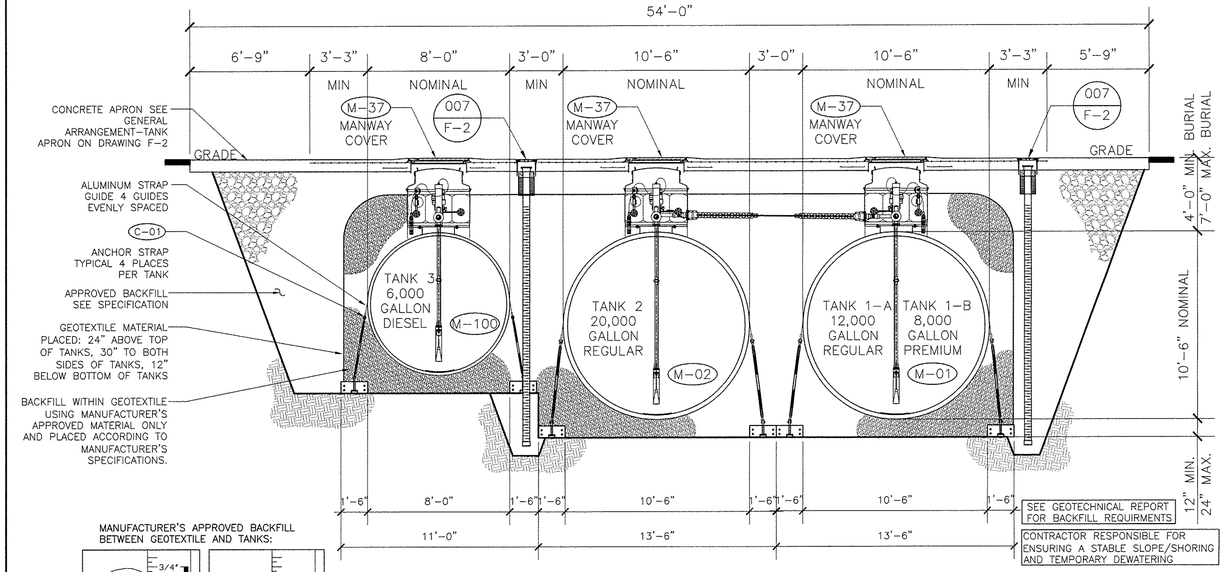

MANUFACTURER'S APPROVED BACKFILL BETWEEN GEOTEXTILE AND TANKS:

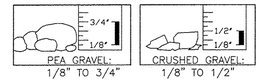

NO PARTICLES LESS THAN 1/8" SIZE SEE MANUFACTURER'S INSTRUCTIONS FOR ADDITIONAL DETAILS AND COMPACTION SPECIFICATIONS.

1. GENERAL CONTRACTOR NOTE:
   A. IT IS THE RESPONSIBILITY OF THE CONTRACTOR TO REVIEW ALL OF THE DRAWINGS AND SPECIFICATIONS ASSOCIATED WITH THIS PROJECT WORK SCOPE PRIOR TO THE INITIATION OF CONSTRUCTION. SHOULD THE CONTRACTOR FIND A CONFLICT WITH THE DOCUMENTS RELATIVE TO THE SPECIFICATIONS OR APPLICABLE CODES, IT IS THE CONTRACTOR'S RESPONSIBILITY TO NOTIFY THE PROJECT ENGINEER OF RECORD IN WRITING PRIOR TO THE START OF CONSTRUCTION. FAILURE BY THE CONTRACTOR TO NOTIFY THE PROJECT ENGINEER SHALL CONSTITUTE ACCEPTANCE OF FULL RESPONSIBILITY BY THE CONTRACTOR TO COMPLETE THE SCOPE OF WORK AS DEFINED BY THE DRAWINGS AND IN FULL CONFORMANCE WITH LOCAL REGULATIONS AND CODES.

2. GENERAL EXCAVATION NOTES:
   A. CONTRACTOR SHOULD NOT EXCAVATE OUTSIDE PROPERTY LIMITS.
   B. SHORING MAY BE REQUIRED TO AVOID UNDERMINING ADJACENT UTILITIES AND PROPERTY LINES.
   C. CONTRACTOR IS RESPONSIBLE FOR DETERMINING IF SHORING IS REQUIRED.
   D. REFER TO CIVIL PLANS FOR LOCATION OF PROPERTY LINES. AND ADJACENT UTILITIES.

3. WHEN WORKING BELOW GRADE, EXTREME CARE MUST BE TAKEN TO ASSURE WORKMEN SAFETY. SLOPING AND SHORING SHALL BE PROVIDED TO COMPLY WITH OSHA CONSTRUCTION INDUSTRY STANDARDS 29 CFR PART 1926 SUBPART P, OSHA STANDARDS–EXCAVATIONS: FINAL RULE OCTOBER 1, 1989. HARD HATS SHALL BE WORN BY ALL WORKMEN OPERATING IN EXCAVATION OR WHERE OVERHEAD WORK IS PROGRESSING.

4. TANK ANCHORING REQUIRED WHEN A HIGH WATER TABLE IS ENCOUNTERED OR REQUIRED BY LOCAL REGULATION. CONSULT WITH OWNER'S REPRESENTATIVE.

5. INSTALL DEADMEN ANCHORS PER TANK MANUFACTURERS INSTALLATIONS.

6. TOTAL LENGTH OF SITE FABRICATED DEADMEN ARE EQUAL TO THE OVERALL LENGTH OF TANK MINIMUM.

6A. OPTION MANUFACTURER PRECAST DEADMEN: DIMENSIONS FOR 8' DIA. 6,000 GALLON TANK ARE 12"x12"x18'L, QTY: (2). FOR 10' DIA. 10,000 GALLON TANK ARE 12"x12"x18'L, QTY: (2). FOR 10' DIA. 15,000 GALLON TANK ARE 12"x12"x14'L, QTY: (4).

7. EACH TANK REQUIRES DEADMEN IN EACH SIDE.

8. HOLD DOWN STRAPS ARE REQUIRED FOR 6,000, 10,000, AND 15,000 GALLON TANKS AS SPECIFIED AND SUPPLIED BY TANK MANUFACTURER.

9. LOCATE STRAPS ON RIBS WHERE INDICATED ON TANK.

10. FASTEN WIRE WITH AT LEAST THREE CLAMPS AROUND DEADMEN AND THROUGH THE END POINT OF THE HOLD DOWN STRAP. CLAMPS SHALL BE ALTERNATED 180° FROM EACH OTHER.

11. ATTACH ALL HOLD DOWN STRAPS TO CABLE USING TURNBUCKLES. UNIFORMLY TIGHTEN ALL STRAPS TO ACHIEVE EQUAL TENSION WITHOUT TANK DEFLECTION. MEASURE TANK DIAMETER BEFORE AND AFTER TIGHTENING STRAPS TO ENSURE NO TANK DEFLECTION.

12. WIRE ROPE MINIMUM DIAMETER 1/2".

13. TURNBUCKLES SUPPLIED BY TANK MANUFACTURER.

14. COAT ALL EXPOSED STRAPS, CABLES, TURNBUCKLES, AND REINFORCING BARS WITH MASTIC AND PLASTIC WRAP.

15. EXACT BURIAL DEPTH WILL VARY. SEE SPECIFIC SITE GRADING PLAN. 48" MINIMUM, 7'-0" MAXIMUM.

16. PEA GRAVEL BACKFILL, ALL OTHER MATERIAL MUST BE APPROVED BY THE TANK MANUFACTURER AND OWNER'S FIELD REPRESENTATIVE.

17. SAFE EXCAVATION SLOPES ARE THE CONTRACTOR'S RESPONSIBILITY. THE EXCAVATION MUST BE SLOPED OR BENCHED IN ACCORDANCE WITH OSHA SAFETY REQUIREMENTS. IF THE EXCAVATION CANNOT BE PROPERLY SLOPED OR BENCHED, THE CONTRACTOR WILL PROVIDE APPROPRIATE EXCAVATION SUPPORT (i.e. SHEETING AND SHORING) TO FURNISH SAFE CONDITIONS.

18. IT IS THE RESPONSIBILITY OF THE CONTRACTOR TO ENSURE THAT ALL UNDERGROUND FRP STORAGE TANKS BE INSTALLED ACCORDING TO LOCAL, STATE AND FEDERAL REGULATIONS AND MANUFACTURER'S SPECIFICATIONS.

19. MANUFACTURER'S ANCHORING NOTES:
   A. MECHANICAL TANK ANCHORING IS REQUIRED FOR ALL TANK INSTALLATIONS. ANCHORING/DEADMEN TO BE DESIGNED BY TANK MANUFACTURER AND ARE TO BE INSTALLED PER TANK MANUFACTURER'S SPECIFICATIONS.
   B. USE ONLY TANK MANUFACTURERS SPECIFIED ANCHOR STRAPS, NUMBER AND LOCATION IN ACCORDANCE WITH TANK MANUFACTURER'S INSTALLATION INSTRUCTIONS.
   C. ALL HOLD–DOWN STRAPS MUST BE UNIFORMLY TIGHTENED. STRAPS MUST BE TIGHTENED UNTIL SNUG, BUT CAUSE NO DEFLECTION OF THE TANK.
   D. WIRE ROPE ANCHORS OVER THE TANKS ARE NOT ACCEPTABLE AS A MEANS OF ANCHORING TANKS. UNLESS WRITTEN CONFIRMATION IS RECEIVED FROM CSI ON ALL ALTERATIVE METHOD.
   E. ALL TANKS ARE TO BE SET LEVEL IN ACCORDANCE WITH MANUFACTURER'S INSTALLATION INSTRUCTIONS.

003 TANK ANCHORING HARDWARE FOR PRECAST DEADMEN

SCALE: 1" = 1'-0"

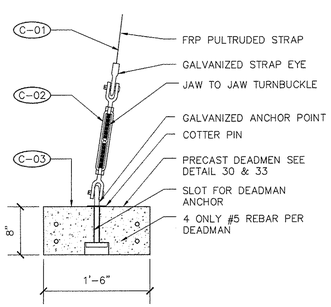

004 TANK MANUFACTURING PRECAST DEADMEN DETAIL

SCALE: 1/2" = 1'-0"

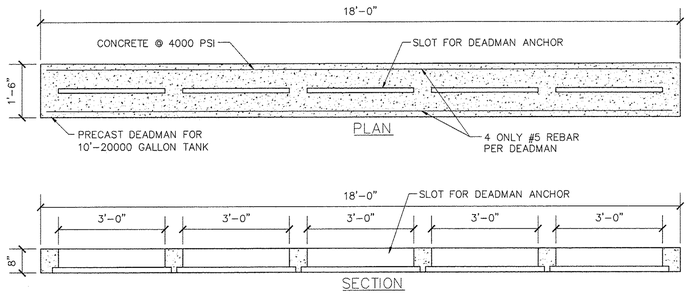

005 TANK MANUFACTURING PRECAST DEADMEN DETAIL

SCALE: 1/2" = 1'-0"

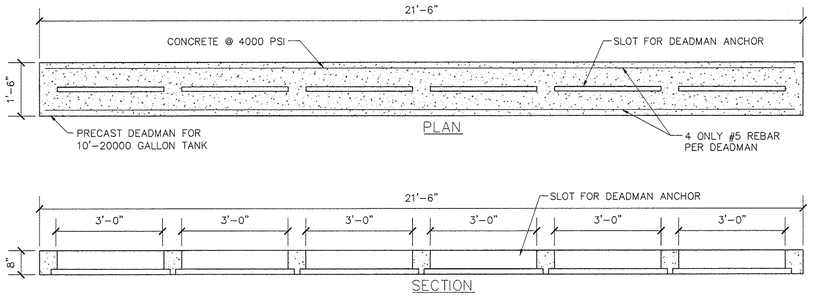

Rev. #	Date	Description

CUMBERLAND FARMS, INC

CUMBERLAND FARMS, INC # V-0636
22905 S.R.7, BOCA RATON, FL.
SECTION 25, TOWNSHIP 47 S., RANGE 41 E.

TANK ANCHORING PLAN, SECTIONS AND DETAILS

Cumberland FARMS
CUMBERLAND FARMS INC.
100 CROSSING BLVD
FRAMINGHAM, MA 01702

CORE STATES GROUP
1700 Industrial Drive, Suite B
Rogers, AR 72756
Phone (479) 986-4000
FAX (479) 986-4401

Job#:	CFI-12653
Scale:	AS NOTED
Date:	10-12-12
Drawn By:	WLJ
Checked By:	RGS

Documents prepared by Core States Group are to be used only for the specific project and purpose for which they are intended. Any extension of use to other projects, by owner or any other party, without the express written consent of Core States Group is done at the user's own risk. If used in a way other than originally intended, the user will hold Core States Group harmless from all claims and losses.

DAVID M. LEIFFER LICENSE No. 68170 STATE OF FLORIDA PROFESSIONAL ENGINEER

DAVID M. LEIFFER
P.E.# 68170

NOV 01 2012

F-3

Drawing: W:\Cumberland Farms BRB\Boca raton, FL\dwgs\S-F3.dwg Layout

001 DISPENSER FRONT VIEW

SCALE: N.T.S.

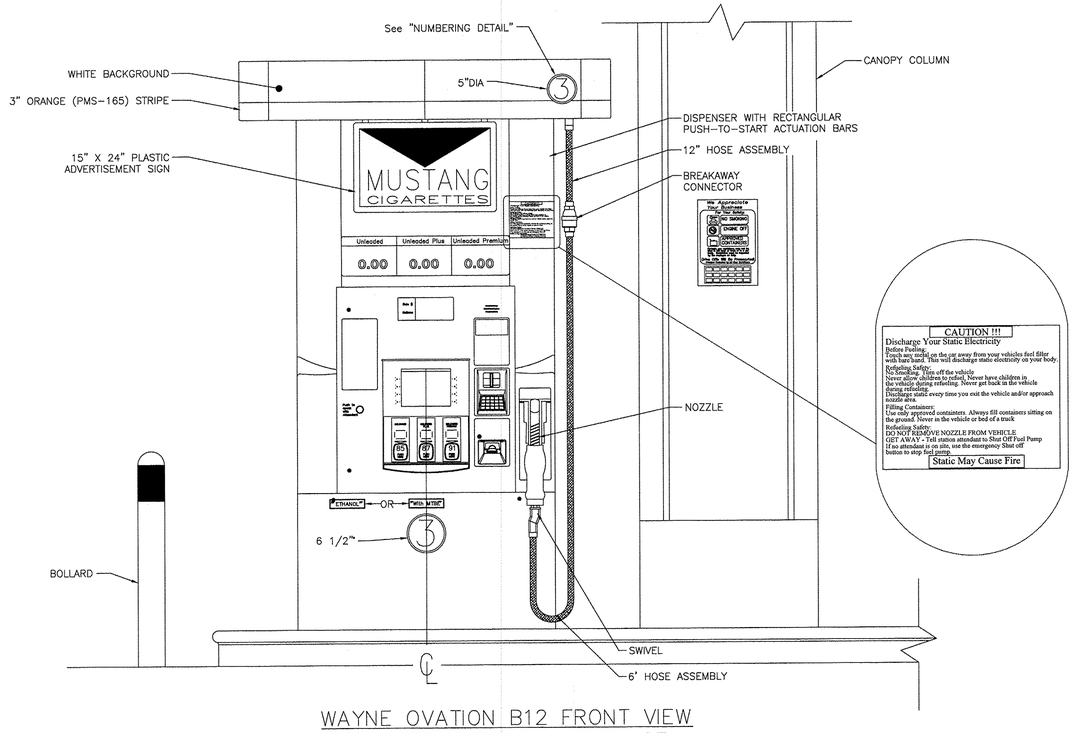

WAYNE OVATION B12 FRONT VIEW
DISPENSER DETAILS & SIGNAGE

002 DISPENSER SDIE VIEW

SCALE: N.T.S.

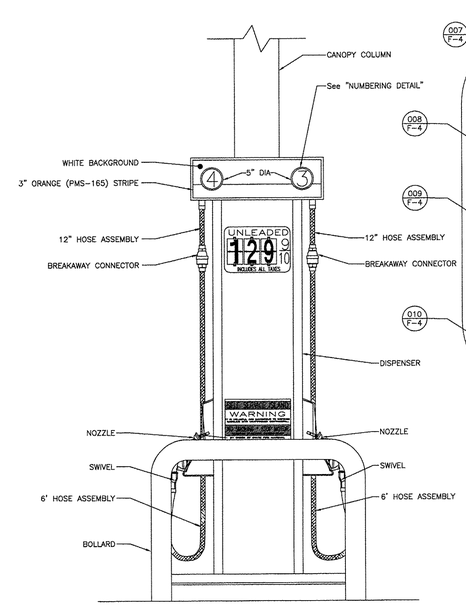

WAYNE OVATION B12/B23 END VIEW
DISPENSER DETAILS & SIGNAGE

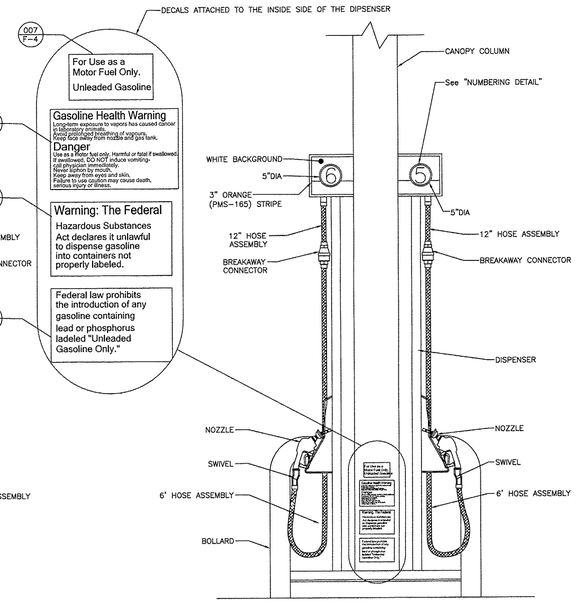

WAYNE OVATION B12/B23 END VIEW
DISPENSER DETAILS & SIGNAGE

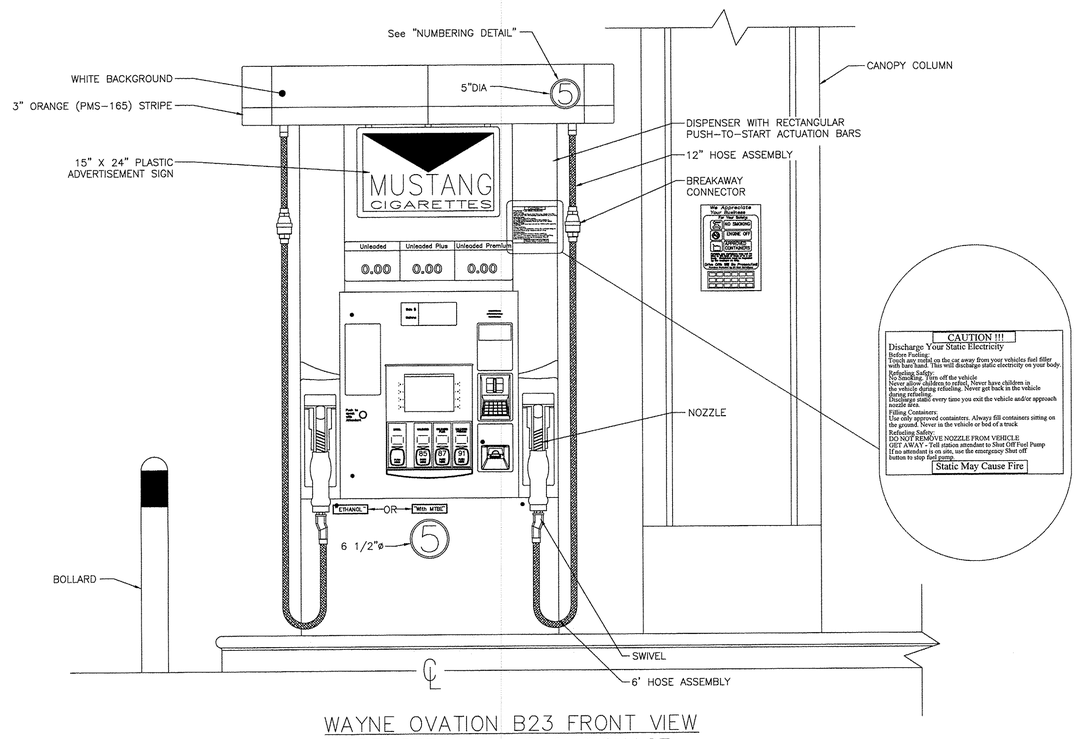

WAYNE OVATION B23 FRONT VIEW
DISPENSER DETAILS & SIGNAGE

003 DISPENSER DETAILS

SCALE: N.T.S.

NOTES:
- ADA KEYPAD SUPPLIED BY OWNER AND INSTALLED BY GENERAL CONTRACTOR.
- THERE ARE TO BE TWO KEYPADS INSTALLED ONE ON EACH SIDE OF ADA APPROVED DISPENSER.
- INDIVIDUAL DISPENSER PLACEMENT TO BE CONFIRMED BY OWNER'S FIELD REPRESENTITIVE.

ADA KEYPAD

004 DISPENSER FACE SIGN No. 1

SCALE: N.T.S.

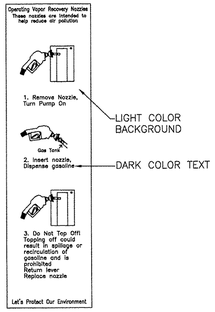

005 DISPENSER FACE SIGN No. 2

SCALE: N.T.S.

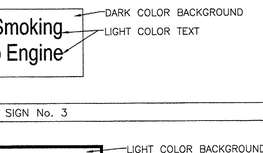

006 DISPENSER FACE SIGN No. 3

SCALE: N.T.S.

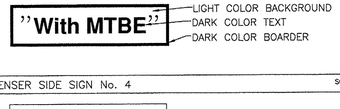

007 DISPENSER SIDE SIGN No. 4

SCALE: N.T.S.

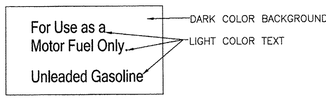

008 DISPENSER SIDE SIGN No. 5

SCALE: N.T.S.

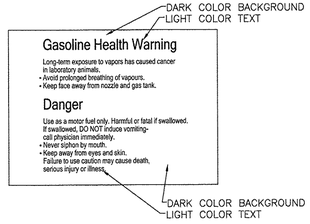

009 DISPENSER SIDE SIGN No. 6

SCALE: N.T.S.

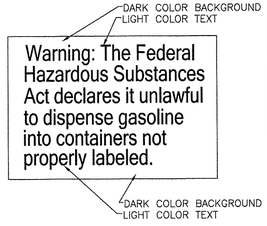

010 DISPENSER SIDE SIGN No. 7

SCALE: N.T.S.

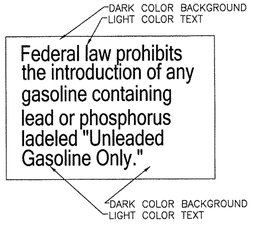

Rev. #	Date	Description

CUMBERLAND FARMS, INC

CUMBERLAND FARMS, INC # V-0636
22905 S.R.7, BOCA RATON, FL.
SECTION 25, TOWNSHIP 47 S., RANGE 41 E.

TYPICAL DISPENSER DETAILS AND FACILITY SIGNAGE

Cumberland FARMS
CUMBERLAND FARMS INC.
100 CROSSING BLVD
FRAMINGHAM, MA 01702

CORE STATES GROUP
1700 Industrial Drive, Suite B
Rogers, AR 72756
Phone (479) 936-9400
FAX (479) 936-4401

Job#:	CFI-12653
Scale:	AS NOTED
Date:	10-12-12
Drawn By:	WLJ
Checked By:	TWP

Documents prepared by Core States Group are to be used only for the specific project and specific use for which they were prepared and any extension of use to other projects, by owner or any other party, without the express written consent of Core States Group, is at the user's own risk. If used in a way other than that specifically intended, the owner agrees to indemnify and hold harmless from all claims and losses.

DAVID M. LEIFFER
LICENSE
No. 68170
STATE OF FLORIDA
PROFESSIONAL ENGINEER

DAVID M. LEIFFER
P.E.# 68170

NOV 01 2012

F-4

Drawing: V:\Cumberland Farms 2012\Boca raton, FL\dwgs\V-F4.dwg, Layout

001 GENERAL ARRANGEMENT – DISPENSER AND TANK AREA

SCALE: 1/8" = 1'-0"

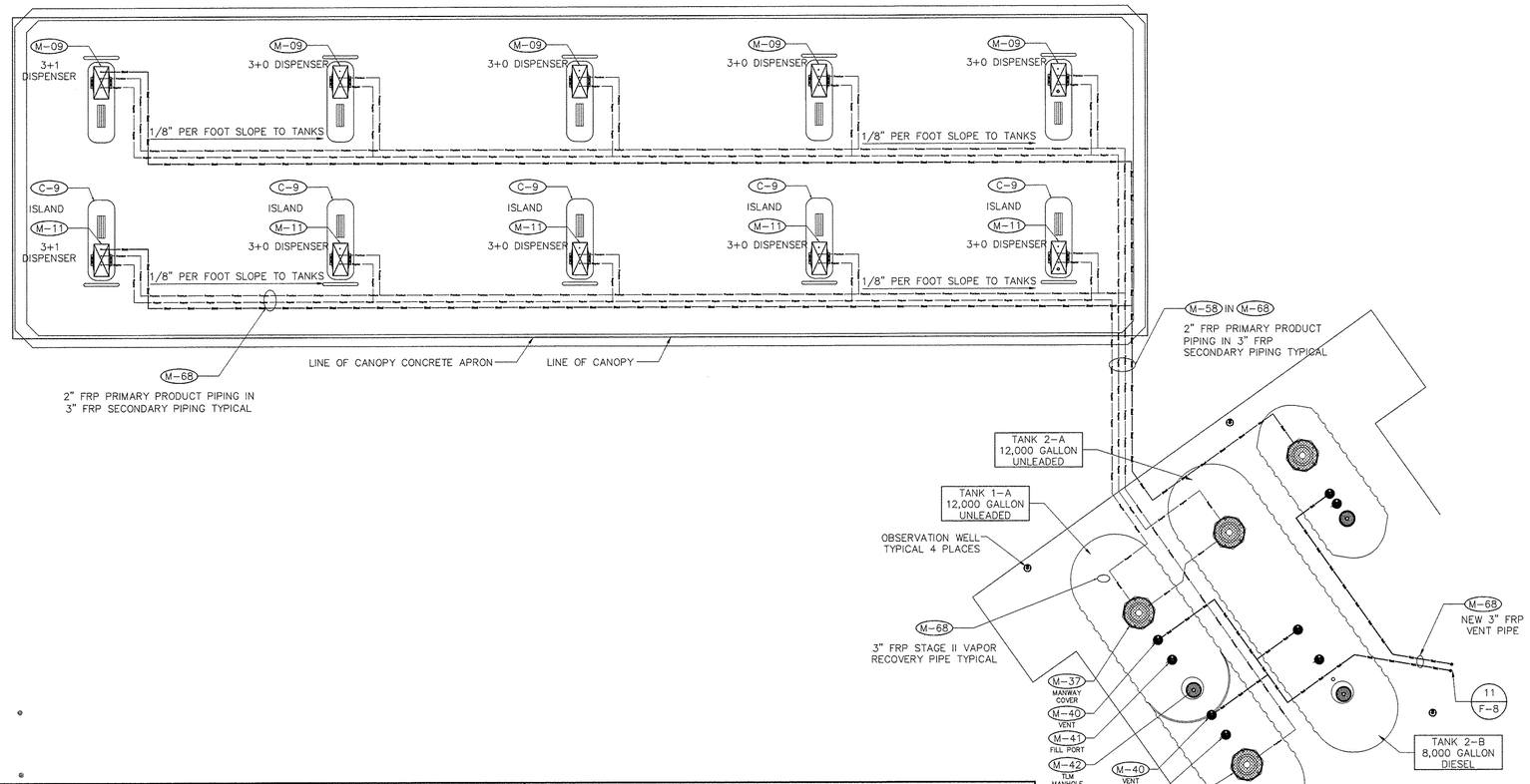

002 DISPENSER SUMP – SIDE VIEW (PRODUCT PIPING)

SCALE: 1"=1'-0"

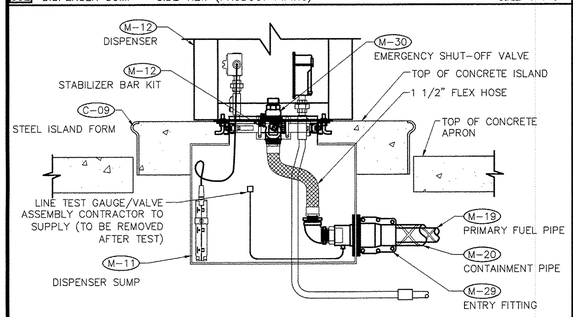

003 TYPICAL END-OF-LINE DISPENSER SUMP PLAN

SCALE: 1/2"=1'-0"

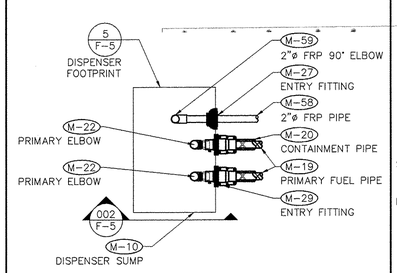

004 DISPENSER FOOTPRINT

SCALE: 1"=1'-0"

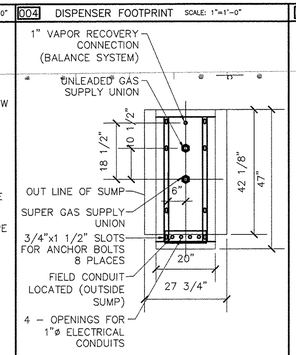

005 PRODUCT SHEAR VALVE PLACEMENT DETAIL

SCALE: 1 1/2"= 1'-0"

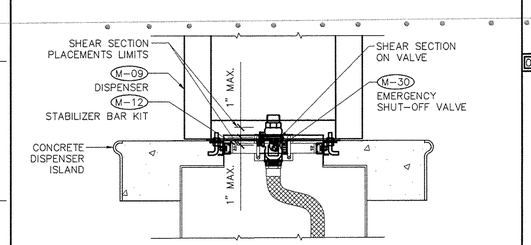

006 NOT USED

007 NOT USED

008 FRP PIPING ELEVATION CHANGE DETAILS

N.T.S.

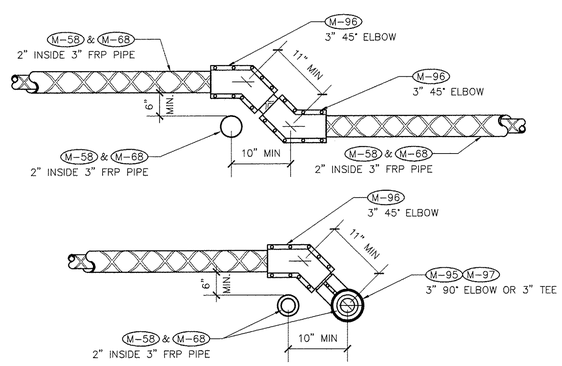

009 FRP DOG LEG DETAIL

N.T.S.

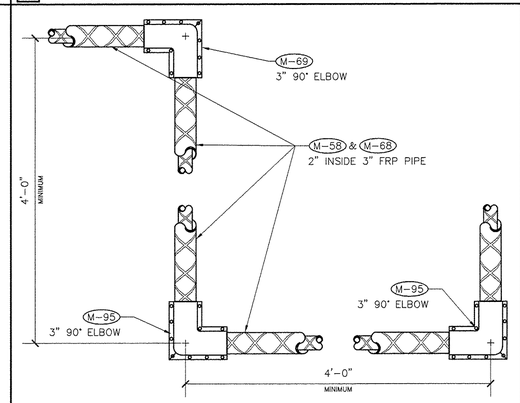

010 NOT USED

Rev. #	Date	Description

CUMBERLAND FARMS, INC

CUMBERLAND FARMS, INC # V-0636
22905 S.R.7, BOCA RATON, FL.
SECTION 25, TOWNSHIP 47 S., RANGE 41 E.

GENERAL ARRANGEMENT DISPENSER AND TANK AREA

Cumberland FARMS
CUMBERLAND FARMS INC.
100 CROSSING BLVD
FRAMINGHAM, MA 01702

CORE STATES GROUP
1700 Industrial Drive, Suite B
Rogers, AR 72756
Phone (479) 986-4400
FAX (479) 986-4401

Job#:	CFI-12653
Scale:	AS NOTED
Date:	10-12-12
Drawn By:	WLJ
Checked By:	RGS

Documents prepared by Core States Group are to be used only for the specific project and specific site for which they are intended. Any extension of use to other projects, by owner or any other party, without the express written consent of Core States Group is done at the user's own risk. If used in a way that has not been approved or intended, user will hold Core States Group harmless from all claims and losses.

DAVID M. LEIFFER LICENSE No. 68170 STATE OF FLORIDA PROFESSIONAL ENGINEER

DAVID M. LEIFFER
P.E.# 68170

NOV 01 2012

F-5

Drawing: V:\Cumberland Farms 2012\Beck Acton, FL\dwgs\V-F5.dwg Layout

001 TYPICAL 20,000 GALLON SPLIT 12,000/8,000 TANK APRON PLAN

SCALE: 1/2" = 1'-0"

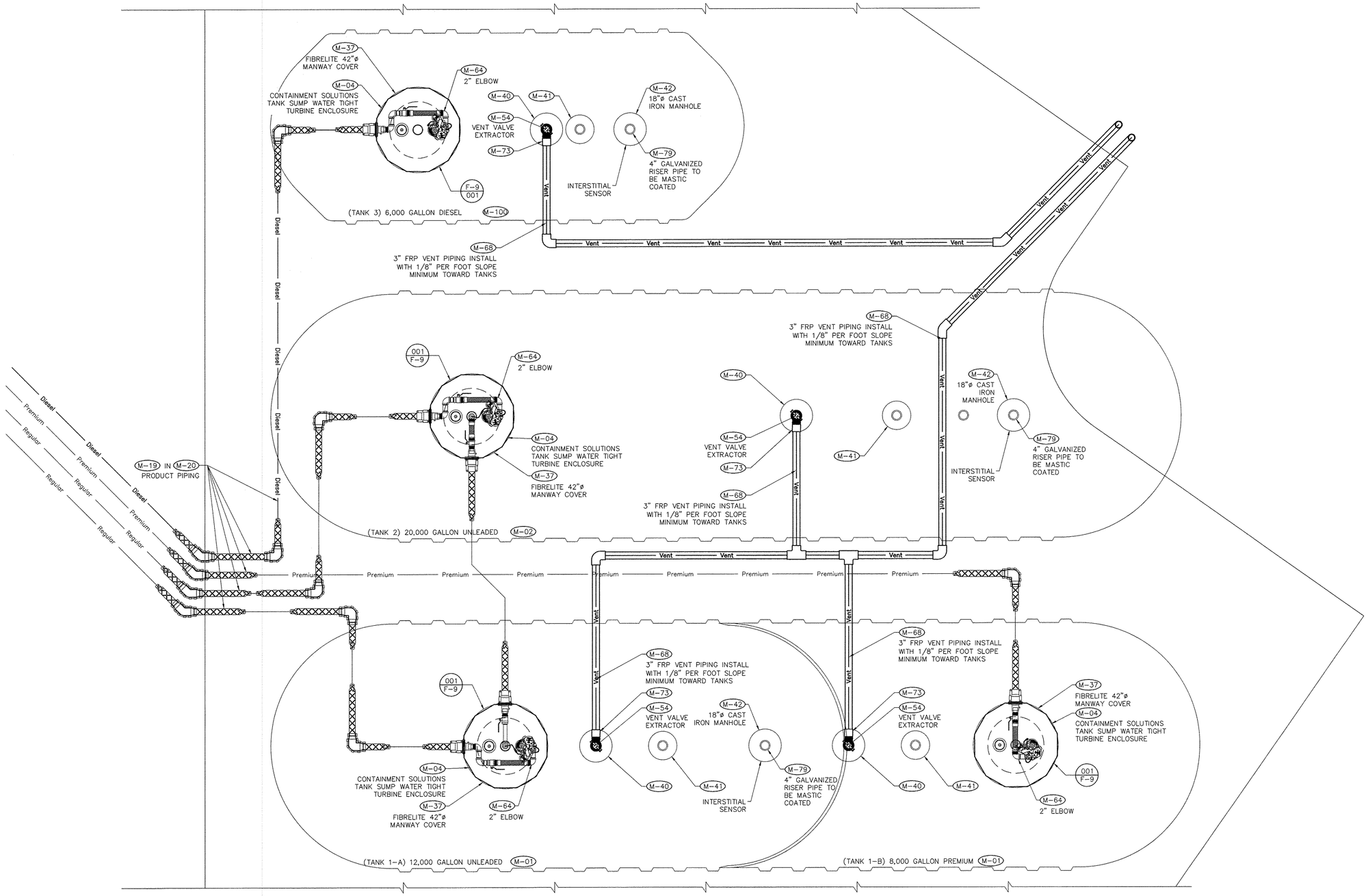

Rev. #	Date	Description

CUMBERLAND FARMS, INC

CUMBERLAND FARMS, INC # V-0636
22905 S.R.7, BOCA RATON, FL
SECTION 25, TOWNSHIP 47 S., RANGE 41 E.

TANK TOP FITTINGS AND PIPING, UST PLANS, SECTIONS AND DETAILS

Cumberland FARMS
CUMBERLAND FARMS INC.
100 CROSSING BLVD.
FRAMINGHAM, MA 01702

CORE STATES GROUP
1700 Industrial Drive, Suite B
Rogers, AR 72758
Phone (479) 986-4400
Fax (479) 986-4401

Job#:	CFI-12653
Scale:	AS NOTED
Date:	10-12-12
Drawn By:	WLJ
Checked By:	RGS

Documents prepared by Core States Group are to be used only for the specific project and specific use for which they are intended. Any other extension of use to other projects, by owner or any other party, without the expressed, written consent of Core States Group, is done at the user's own risk. If used in a way other than that specifically intended, user will hold Core States Group harmless from all claims and losses.

DAVID M. LEIFFER
LICENSE No. 68170
STATE OF FLORIDA
PROFESSIONAL ENGINEER

DAVID M. LEIFFER
P.E.# 68170

NOV 01 2012

F-6

Drawing: M:\Cumberland Farms 2012\Boca Raton, FL\dwgs\8-F.dwg Layout

001 TYPICAL 20,000 GALLON SPLIT 12,000/8,000 TANK ELEVATION

SCALE: 1/2" = 1'-0"

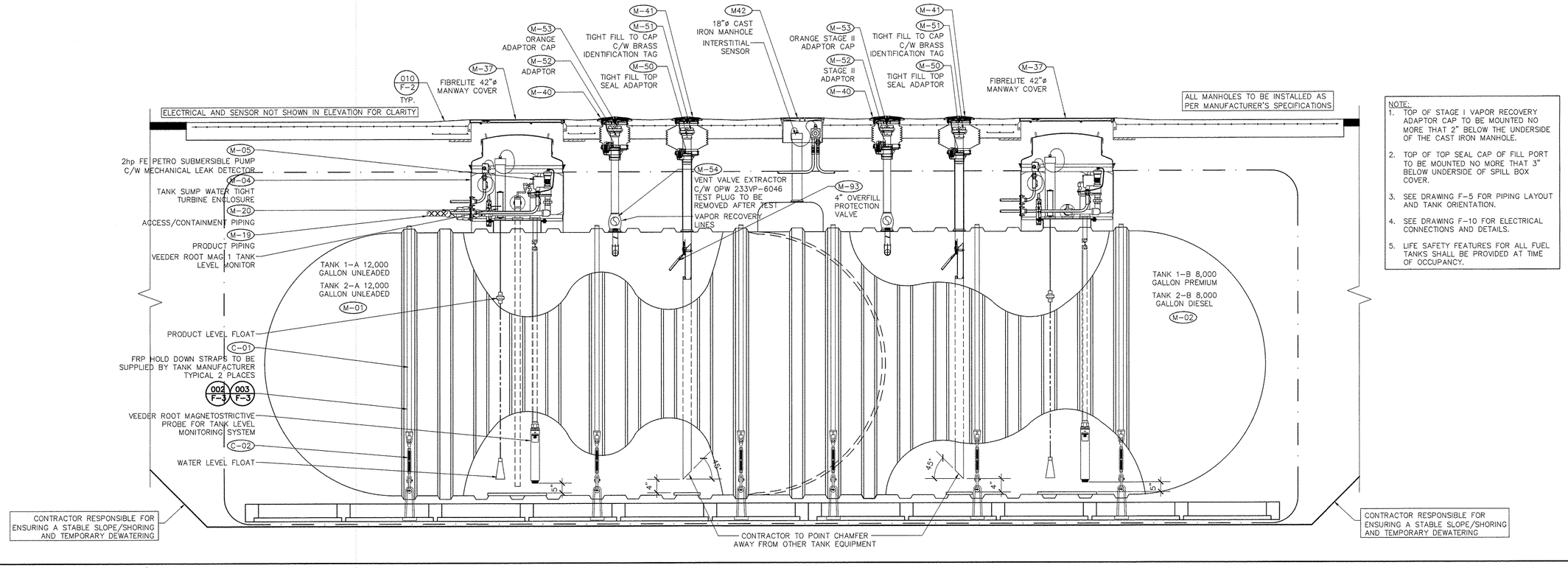

NOTE:
1. TOP OF STAGE I VAPOR RECOVERY ADAPTOR CAP TO BE MOUNTED NO MORE THAT 2" BELOW THE UNDERSIDE OF THE CAST IRON MANHOLE.
2. TOP OF TOP SEAL CAP OF FILL PORT TO BE MOUNTED NO MORE THAT 3" BELOW UNDERSIDE OF SPILL BOX COVER.
3. SEE DRAWING F-5 FOR PIPING LAYOUT AND TANK ORIENTATION.
4. SEE DRAWING F-10 FOR ELECTRICAL CONNECTIONS AND DETAILS.
5. LIFE SAFETY FEATURES FOR ALL FUEL TANKS SHALL BE PROVIDED AT TIME OF OCCUPANCY.

002 TYPICAL 20,000 GALLON SPLIT 12,000/8,000 TANK ELEVATION

SCALE: 1/2" = 1'-0"

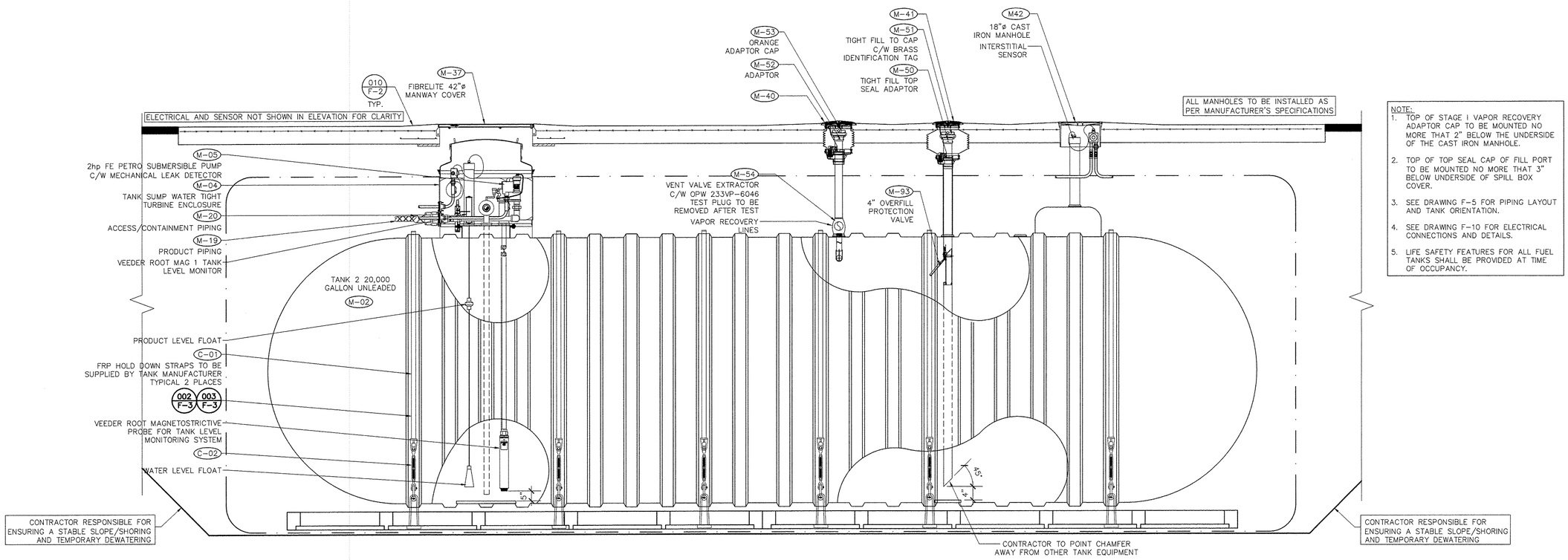

NOTE:
1. TOP OF STAGE I VAPOR RECOVERY ADAPTOR CAP TO BE MOUNTED NO MORE THAT 2" BELOW THE UNDERSIDE OF THE CAST IRON MANHOLE.
2. TOP OF TOP SEAL CAP OF FILL PORT TO BE MOUNTED NO MORE THAT 3" BELOW UNDERSIDE OF SPILL BOX COVER.
3. SEE DRAWING F-5 FOR PIPING LAYOUT AND TANK ORIENTATION.
4. SEE DRAWING F-10 FOR ELECTRICAL CONNECTIONS AND DETAILS.
5. LIFE SAFETY FEATURES FOR ALL FUEL TANKS SHALL BE PROVIDED AT TIME OF OCCUPANCY.

Rev. #	Date	Description

CUMBERLAND FARMS, INC

CUMBERLAND FARMS, INC # V-0636
22905 S.R.7, BOCA RATON, FL.
SECTION 25, TOWNSHIP 47 S., RANGE 41 E.

TANK TOP FITTINGS AND PIPING, SECTION

Cumberland FARMS
CUMBERLAND FARMS INC.
100 CROSSING BLVD
FRAMINGHAM, MA 01702

CORE STATES GROUP
1760 Industrial Drive, Suite B
Rogers, AR 72756
Phone (479) 986-4400
FAX (479) 986-4401

Job#:	CFI-12653
Scale:	AS NOTED
Date:	10-12-12
Drawn By:	WLJ
Checked By:	RGS

Documents prepared by Core States Group are to be used only for the specific project and specific use for which they are intended. Any re-use, extension of use to other projects, by owner or any other party, without the express written consent of Core States Group is done at the user's own risk. If used in a way other than that specifically intended, indemnification of Core States Group harmless from all claims and losses.

DAVID M. LEIFFER LICENSE No. 68170 STATE OF FLORIDA PROFESSIONAL ENGINEER

DAVID M. LEIFFER
P.E.# 68170

NOV 01 2012

F-7

Drawing: V:\Cumberland Farms 8th\Boca raton, FL\dwg\V-F7.dwg Layout

001 TYPICAL 6,000 GALLON TANK ELEVATION

SCALE: 1/2" = 1'-0"

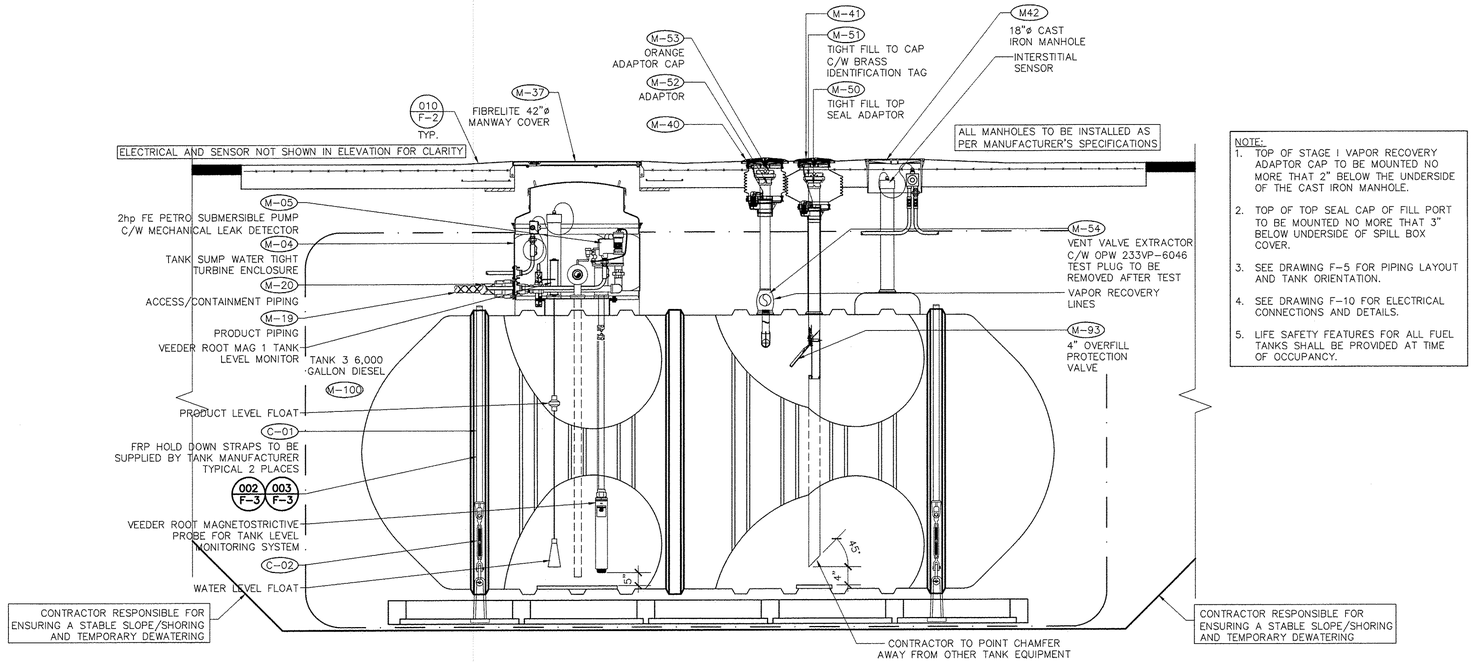

NOTE:

1. TOP OF STAGE I VAPOR RECOVERY ADAPTOR CAP TO BE MOUNTED NO MORE THAT 2" BELOW THE UNDERSIDE OF THE CAST IRON MANHOLE.
2. TOP OF TOP SEAL CAP OF FILL PORT TO BE MOUNTED NO MORE THAT 3" BELOW UNDERSIDE OF SPILL BOX COVER.
3. SEE DRAWING F-5 FOR PIPING LAYOUT AND TANK ORIENTATION.
4. SEE DRAWING F-10 FOR ELECTRICAL CONNECTIONS AND DETAILS.
5. LIFE SAFETY FEATURES FOR ALL FUEL TANKS SHALL BE PROVIDED AT TIME OF OCCUPANCY.

Rev. #	Date	Description

CUMBERLAND FARMS, INC

CUMBERLAND FARMS, INC # V-0636
22905 S.R.7, BOCA RATON, FL.
SECTION 25, TOWNSHIP 47 S., RANGE 41 E.

TANK TOP FITTINGS AND PIPING, SECTION

Cumberland FARMS
CUMBERLAND FARMS INC.
100 CROSSING BLVD
FRAMINGHAM, MA 01702

CORE STATES GROUP
1700 Industrial Drive, Suite B
Rogers, AR 72756
Phone (479) 986-4400
FAX (479) 986-4401

Job#:	CFI-12653
Scale:	AS NOTED
Date:	10-12-12
Drawn By:	WLJ
Checked By:	RGS

Documents prepared by Core States Group are to be used only for the specific project and specific use for which they are intended. Any extension of use to other projects, by owner or any other party, without the express written consent of Core States Group is done at the user's own risk. If used in a way other than originally intended, the user will hold Core States Group harmless from all claims and losses.

DAVID M. LEIFFER LICENSE No. 68170 STATE OF FLORIDA PROFESSIONAL ENGINEER

DAVID M. LEIFFER
P.E.# 68170

NOV 01 2012

F-7A

Drawing: W:\Cumberland Farms 8025\Boca raton, FL\dwgs\V0-77\dwg Layout

001 REGULAR TANK SUMP DETAIL TANK 1–A

SCALE: 3/4"=1'–0"

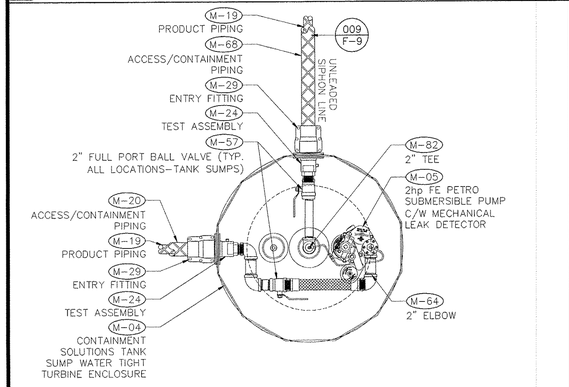

002 REGULAR TANK SUMP DETAIL TANK 2–A

SCALE: 3/4"=1'–0"

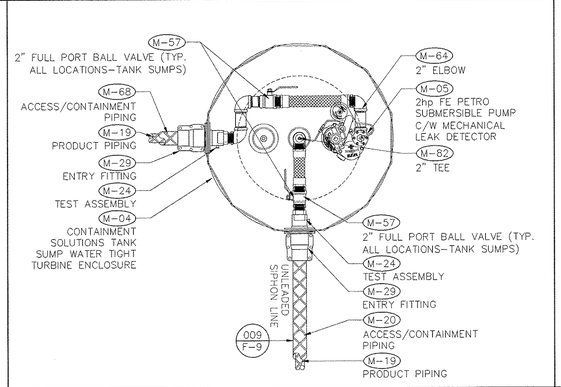

003 SUPER TANK SUMP DETAIL TANK 1–B

SCALE: 3/4"=1'–0"

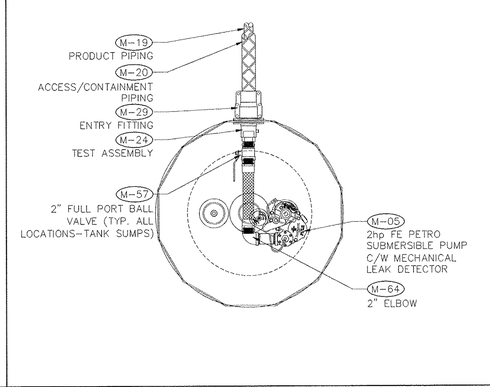

004 MINIMUM MANUFACTURER'S BACKFILL REQUIREMENTS

SCALE: 1"=1'–0"

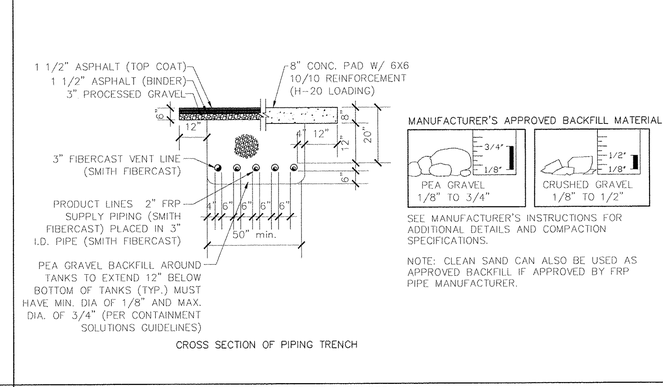

005 UNLEADED TANKS 1–A & 2–A SUMP SECTION

SCALE: 3/4"=1'–0"

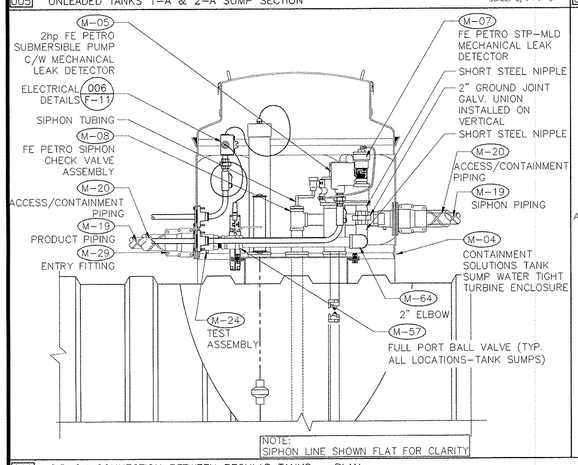

006 SUPER & DIESEL TANKS 1–B & 2–B SUMP SECTION

SCALE: 3/4"=1'–0"

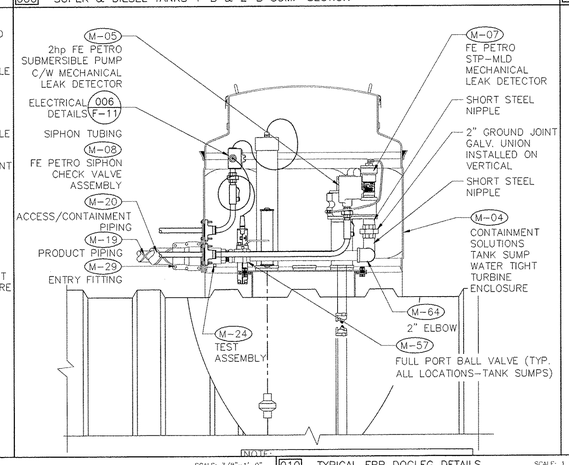

007 DIESEL TANK SUMP DETAIL TANK 2–B

SCALE: 3/4"=1'–0"

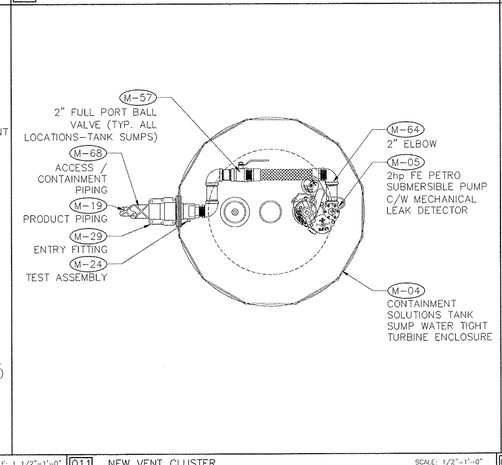

008 CONTAINMENT SOLUTIONS TURBINE ENCLOSUE FIELD BONDED JOINT

SCALE: 1"=1'–0"

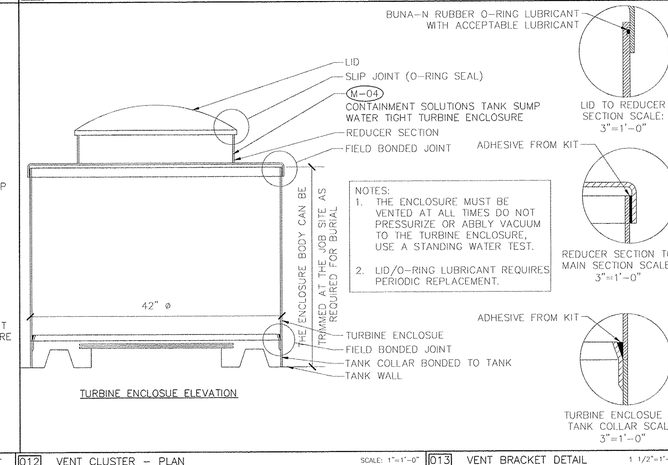

009 SIPHON CONNECTION BETWEEN REGULAR TANKS – PLAN

SCALE: 3/8"=1'–0"

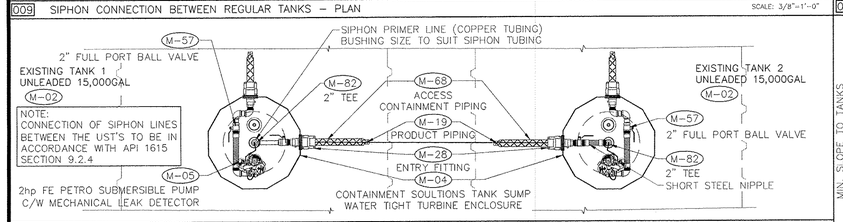

010 TYPICAL FRP DOGLEG DETAILS

SCALE: 1 1/2"=1'–0"

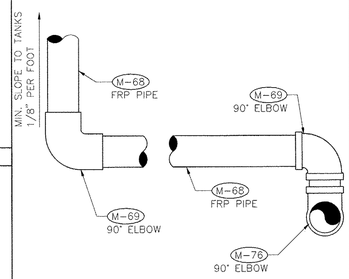

011 NEW VENT CLUSTER,

SCALE: 1/2"=1'–0"

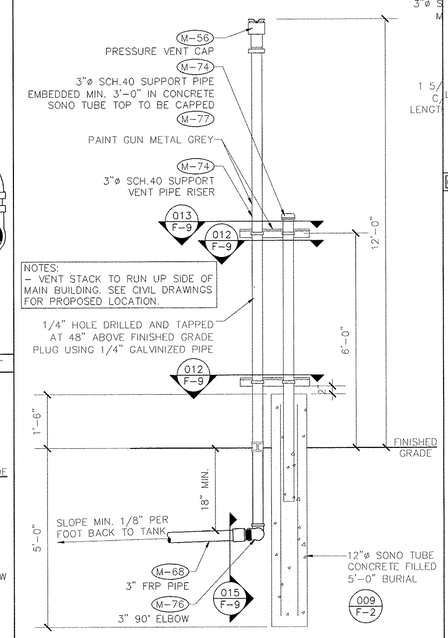

012 VENT CLUSTER – PLAN

SCALE: 1"=1'–0"

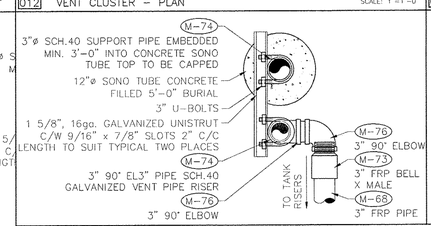

013 VENT BRACKET DETAIL

1 1/2"=1'–0"

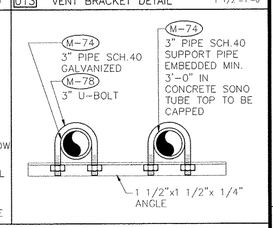

014 TYPICAL SIPHON CONNECTION BETWEEN REGULAR TANKS – ELEVATION

SCALE: 3/8"=1'–0"

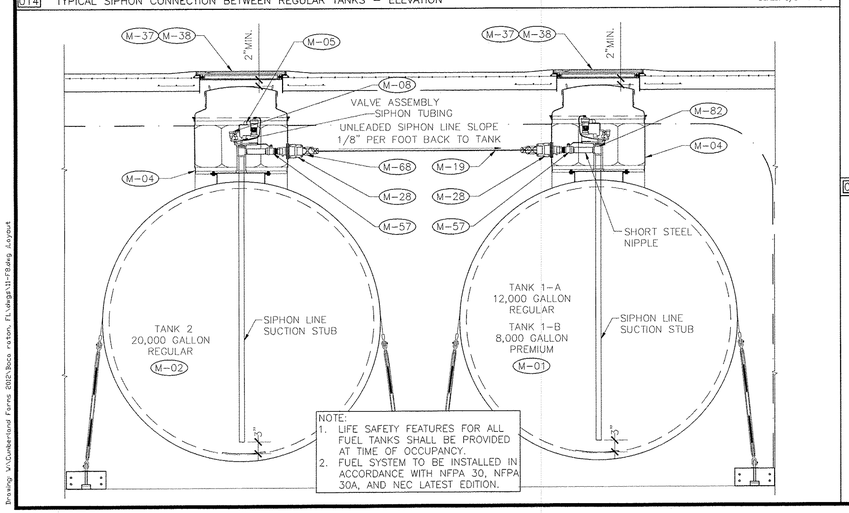

015 VENT CLUSTER SWIVEL JOINT ELEVATION

SCALE: 1"=1'–0"

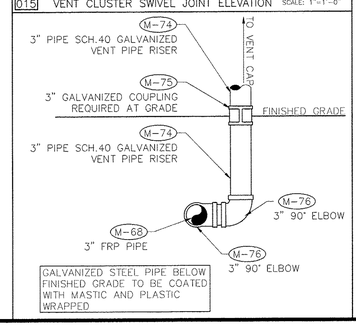

016 TYPICAL MONITORING WELL DETAIL

SCALE: 3/4"=1'–0"

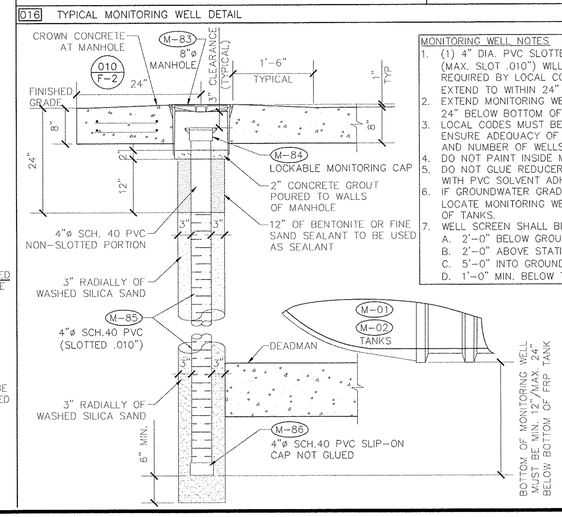

MONITORING WELL NOTES

1. (1) 4" DIA. PVC SLOTTED WELL SCREENS (MAX. SLOT .010") WILL BE INSTALLED AS REQUIRED BY LOCAL CODE. SLOTS WILL EXTEND TO WITHIN 24" BELOW GRADE.
2. EXTEND MONITORING WELL A MINIMUM OF 24" BELOW BOTTOM OF TANKS.
3. LOCAL CODES MUST BE CONSULTED TO ENSURE ADEQUACY OF SIZE, PLACEMENT AND NUMBER OF WELLS.
4. DO NOT PAINT INSIDE MANHOLE.
5. DO NOT GLUE REDUCERS, CAPS OR COLLARS WITH PVC SOLVENT ADHESIVE.
6. IF GROUNDWATER GRADIENTS ARE KNOWN, LOCATE MONITORING WELL "DOWN STREAM" OF TANKS.
7. WELL SCREEN SHALL BE PLACED:
   A. 2'–0" BELOW GROUND SURFACE
   B. 2'–0" ABOVE STATIC GROUNDWATER
   C. 5'–0" INTO GROUNDWATER
   D. 1'–0" MIN. BELOW TANK BOTTOM

Rev #	Date	Description

CUMBERLAND FARMS, INC

CUMBERLAND FARMS, INC # V-0636
22905 S.R.7, BOCA RATON, FL.
SECTION 25, TOWNSHIP 47 S., RANGE 41 E.

MISCELLANEOUS PIPING AND FITTINGS PLANS, SECTIONS AND DETAILS

Cumberland FARMS
CUMBERLAND FARMS INC.
100 CROSSING BLVD
FRAMINGHAM, MA 01702

CORE STATES GROUP
17100 Industrial Drive, Suite B
Rogers, AR 72756
(479) 986-0400 (800) 482-4040
FAX (479) 986-4401

Job#:	CFI-12653
Scale:	AS NOTED
Date:	10-12-12
Drawn By:	WLJ
Checked By:	TWP

Documents prepared by Core States Group are to be used only for the specific project and specific use for which they were prepared and for extension of use to other projects, by owner or any other party, without the express written consent of Core States Group is done at the user's own risk. If used in a way other than that specifically intended, the owner and/or user agrees to hold harmless from all claims and losses.

DAVID M. LEIFFER LICENSE No. 68170 STATE OF FLORIDA PROFESSIONAL ENGINEER

DAVID M. LEIFFER
P.E. # 68170
NOV 01 2012

F-8

Drawing: W:\Cumberland Farms 2012\Boca raton FL\dwgs\11-F8.dwg, Layout

001 GENERAL ARRANGEMENT–DISPENSER AND TANK AREA

SCALE: 1/8" = 1'-0"

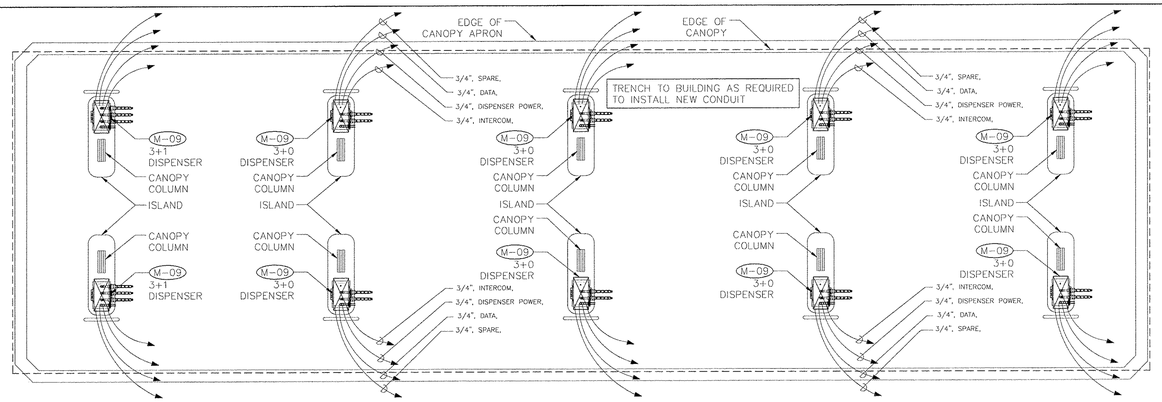

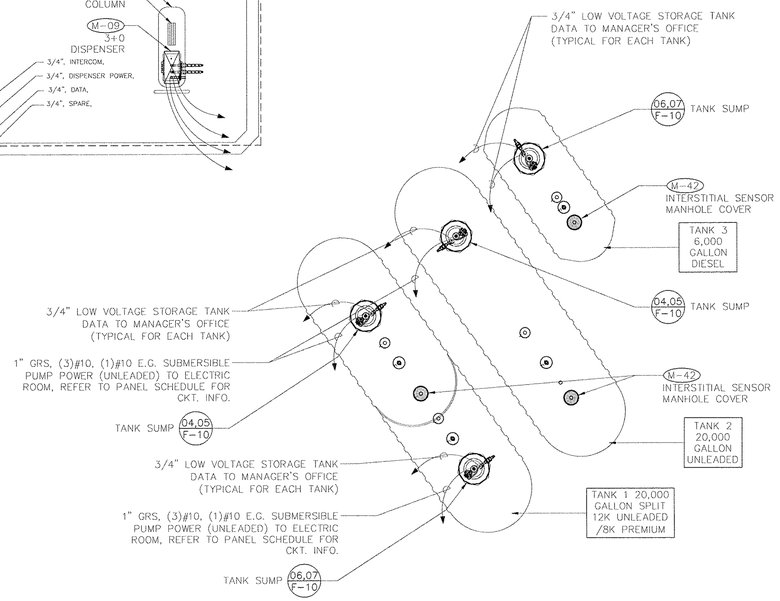

GENERAL INFORMATION

1. SITE PREPARATION:

   A. CONTRACTOR IS TO ENSURE ALL EXISTING UTILITIES ARE LOCATED AND MARKED PRIOR TO ANY DEMOLITION, CONSTRUCTION OR EXCAVATION ON THE SITE.

2. EQUIPMENT:

   A. ALL EQUIPMENT INSTALLATIONS MUST COMPLY WITH MANUFACTURER'S SPECIFICATIONS AND BE INSTALLED IN ACCORDANCE WITH THE PROVISIONS OF NFPA 70, LATEST EDITION AND NFPA 30A. ALL COMPONENTS FOR ELECTRICAL INSTALLATIONS MUST BE UL RATED AND BEAR THE UL SEAL. ALL WORKING CLEARANCES IN FRONT OF PANELS AND EQUIPMENT SHALL BE MAINTAINED.
   B. THE WIRE SIZES SHALL BE INCREASED IF NECESSARY AS REQUIRED BY NFPA 70, LATEST EDITION. THE CONTRACTOR IS RESPONSIBLE FOR DETERMINING REVISED CONDUIT SIZE.

3. CONDUIT:

   A. FOR EACH ELECTRICAL RACEWAY SYSTEM INDICATED, PROVIDE A COMPLETE ASSEMBLY OF CONDUIT WITH FITTINGS, INCLUDING BUT NOT NECESSARILY LIMITED TO, CONNECTORS, NIPPLES, COUPLINGS, EXPANSION FITTINGS, BUSHINGS, LOCKOUTS, OTHER COMPONENTS AND ACCESSORIES AS NEEDED TO FORM A COMPLETE SYSTEM OF THE TYPE INDICATED, AND AS REQUIRED BY NFPA 70, LATEST EDITION.
   B. ALL CONDUIT WITHIN CLASS 1 AREA SHALL BE HEAVY WALL GALVANIZED STEEL EXCEPT AS NOTED OTHERWISE ON THE DRAWINGS. ALL TRANSITION FITTINGS ARE TO BE UL APPROVED FOR DIRECT BURIAL. ALL CONDUIT SHALL BE FREE OF FOREIGN MATTER FROM OBSTRUCTING THE CONDUIT. ALL WIRING AND FITTINGS SHALL BE CLASS 1, GROUP D, AS REQUIRED BY CODE. ALL REQUIRED SEAL-OFF FITTINGS SHALL BE PROPERLY SEALED. SEAL SHALL BE POURED AFTER TESTING PROCEDURES ARE COMPLETE.
   C. CONDUIT RUNS EXCEEDING 25 FEET IN LENGTH SHALL BE EQUIPPED WITH SUITABLE WIRE INSERT TO ENABLE THE PULLING OF A FISH TAPE FOR ADDITIONAL WIRING.
   D. DRAINS SHALL BE INSTALLED AT THE BOTTOM OF VERTICAL CONDUIT RUNS EXCEEDING 10 FEET IN LENGTHS.
   E. WHERE APPLICABLE ALL CONDUIT SHALL BE RIGIDLY SUPPORTED FROM STRUCTURAL MEMBERS WITH MALLEABLE IRON CONDUIT CLAMPS, NOT TO EXCEED 8 FEET ON CENTER. ALL THREAD IS NOT ACCEPTABLE FOR MOUNTING, USE U-BOLTS INSTEAD.
   F. PROVIDE CONDUIT AND FITTINGS AS INDICATED
      1. RIGID STEEL CONDUIT: ANSI C80.1, HOT DIPPED GALVANIZED.
      2. RIGID STEEL CONDUIT FITTINGS: ANSI C80.4.

CONTINUED:

   G. ALL PENETRATIONS THROUGH RATED WALL AND ROOF ASSEMBLIES MUST CONFORM TO UL STANDARD PENETRATION DETAIL, (SYSTEM #F-C-5010), NFPA 70, LATEST EDITION AND ALL APPLICABLE LOCAL CODES.
   H. ALL PENETRATIONS THROUGH RATED SLAB ASSEMBLIES MUST CONFORM TO UL STANDARD PENETRATION DETAIL, (SYSTEM #C-AJ-1064), NFPA 70, LATEST EDITION AND ALL APPLICABLE LOCAL CODES.
   I. MAGNETIC SAFETY TAPE SHALL BE INSTALLED ABOVE ALL UNDERGROUND PRODUCT PIPING AND ELECTRICAL CONDUIT.

4. CABLE AND WIRE CONNECTORS:

   A. WIRE AND CABLE: PROVIDE FACTORY-FABRICATED WIRE AND CABLE OF THE SAME SIZE RATING, MATERIAL AND TYPE AS INDICATED FOR EACH USE, AS SPECIFIED OR UNLESS NOTED OTHERWISE.
   B. CONDUCTORS: PROVIDE SOFT OR ANNEALED COPPER WIRES MEETING, BEFORE STRANDING. THE REQUIREMENTS OF ASTM B-3, STRANDED SPECIFICATIONS FOR SOFT OR ANNEALED COPPER WIRE FOR ELECTRICAL PURPOSES, LATEST EDITION.
      1. CONDUCTORS FOR POWER AND CONTROL WIRING SHALL BE STRANDED COPPER, NO ALUMINUM OR COPPER CLAD ALUMINUM WIRE IS PERMITTED.
      2. THE MINIMUM SIZE FOR POWER WIRING IS #12 AWG UNLESS STATED OTHERWISE ON THE DRAWINGS.
   C. INSTALLATION SHALL MEET OR EXCEED THE REQUIREMENTS OF UL 83, STANDARD FOR THERMOPLASTIC INSULATION WIRES.
      1. INSULATION FOR CONDUCTORS SIZED NO. 18 AWG THROUGH NO. 16 AWG SHALL BE UL TYPE TFFN GASOLINE AND OIL RESISTANT AND BE SO MARKED.
      2. INSULATION FOR CONDUCTORS SIZED NO. 14 AWG THROUGH NO. 8 AWG SHALL BE UL TYPE THHN/THWN GASOLINE AND OIL RESISTANT AND BE SO MARKED.
      3. ALL WIRING INSIDE LIGHTING FIXTURES SHALL BE TEMPERATURE RATED AS PER NFPA 70, LATEST EDITION.
   D. CONNECTORS FOR BUILDING WIRE AND CABLE: PROVIDE FACTORY-FABRICATED, METAL CONNECTORS OF THE SIZE, RATING, AMTERIAL TYPE, AND CLASS REQUIRED FOR EACH USE.
      1. TERMINAL LUGS ARE TO BE USED WHENEVER POSSIBLE. CONNECTORS FOR CONDUCTORS UP TO A MAXIMUM OF NO. 6 AWG WIRE WITH TWO NO. 8 AWG WIRES MAY USE TWIST-ON PRESSURE CONNECTORS OF REQUIRED SIZE, LUG/BOLTED CONNECTIONS ARE REQUIRED FOR ALL CONDUCTORS LARGER THAN #6 AWG.
      2. ALL MOTOR LEADS, #10 AWG OR LARGER, SHALL BE CONNECTED USING PRESSURE FITTED LUGS AND BOLTED.
      3. SPLICES ARE NOT PERMITTED IN FEEDERS, MOTOR LEADS, OR COMMUNICATION/DATE WIRING.
      4. THE USE OF TERMINAL STRIPS FOR WIRING CONNECTIONS IS ENCOURAGED EXCEPT WHEN IN CONFLICT WITH #3 ABOVE.

002 TYPICAL CONDUIT TERMINATION DETAIL

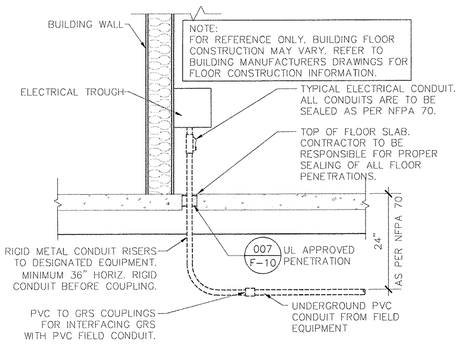

003 TYPICAL CONDUIT WIRING THROUGH DETAIL

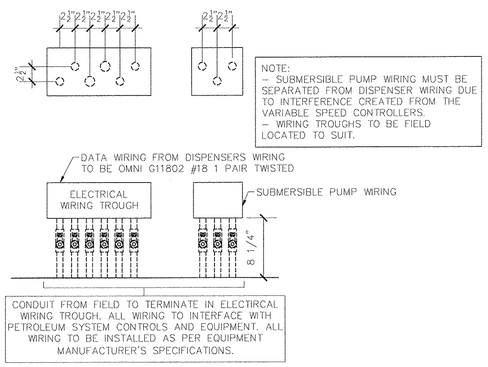

004 TYPICAL VEEDER ROOT CONSOLE

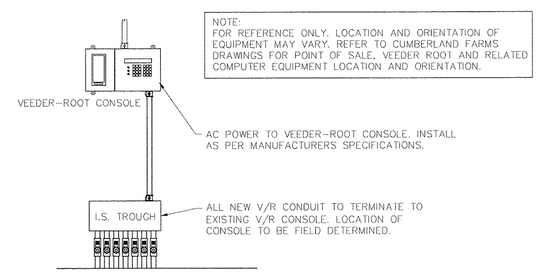

005 TYPICAL PROBE/ SENSOR FIELD WIRING

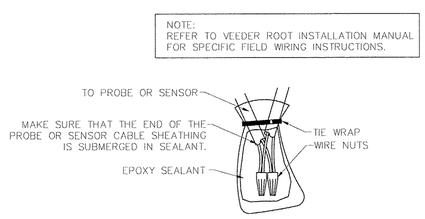

006 TYPICAL UNDER COUNTER CASHIER AREA

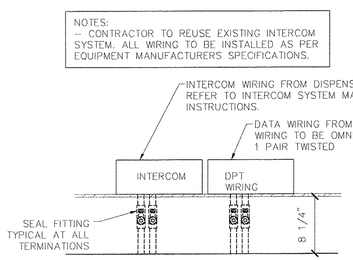

007 UL APPROVED PENETRATION DETAIL

MIN. THKNS OF CONCRETE (in.)	ANNULAR SPACE (in.)	MIN. PACKING MTL. THKNS (in.)	MIN. PACKING MTL. DENSITY (pcf)	F RATING (Hr)
4-1/2	1/2 to 3-3/8	3-1/2	6.0	3
5-1/2	0 to 1-7/8	5	4.0	4

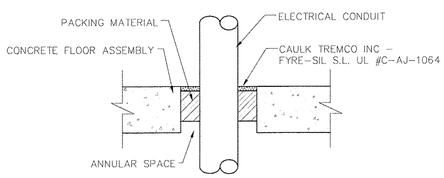

008 GROUNDING DETAILS

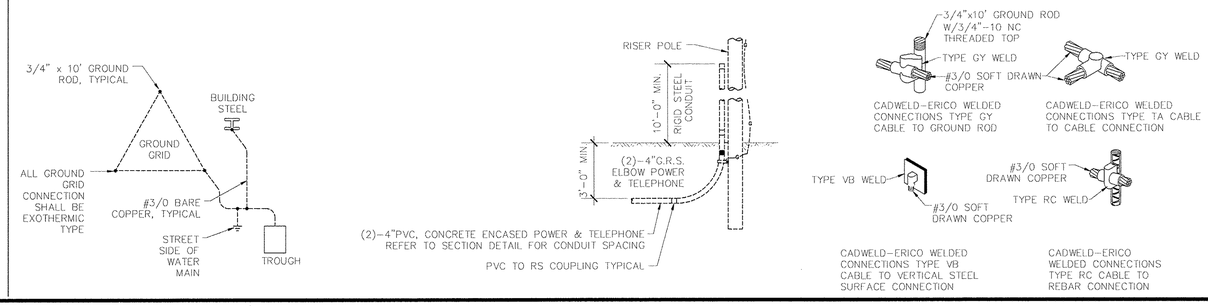

Rev. #	Date	Description

CUMBERLAND FARMS, INC

CUMBERLAND FARMS, INC # V-0636
22905 S.R.7, BOCA RATON, FL.
SECTION 25, TOWNSHIP 47 S., RANGE 41 E.

DISPENSER AND TANK APRON EQUIPMENT AND CONDUIT PLAN

Cumberland FARMS
CUMBERLAND FARMS INC.
100 CROSSING BLVD
FRAMINGHAM, MA 01702

CORE STATES GROUP
1760 Industrial Drive, Suite B
Rogers, AR 72756
Phone (479) 986-4400
FAX (479) 986-4401

Job#:	CFI-12653
Scale:	AS NOTED
Date:	10-12-12
Drawn By:	WLJ
Checked By:	TWP

Documents prepared by Core States Group are to be used only for the specific project and purpose for which they are intended. Any extension of use to other projects, by owner or any other party, without the express written consent of Core States Group is done at the user's own risk. If used in a way that has not been specifically intended, user will hold Core States Group harmless from all claims and losses.

JOHN D. FERGUSON LICENSE No. 67173 STATE OF FLORIDA PROFESSIONAL ENGINEER

JOHN D. FERGUSON
P.E.# 67173

NOV 01 2012

F-9

Drawing: V:\Cumberland Farms 2012\Deck Apron, Plumbing\12-F.dwg Layout

001 TYPICAL DISPENSER ELECTRICAL CONDUIT LAYOUT

SCALE: 1"=1'-0"

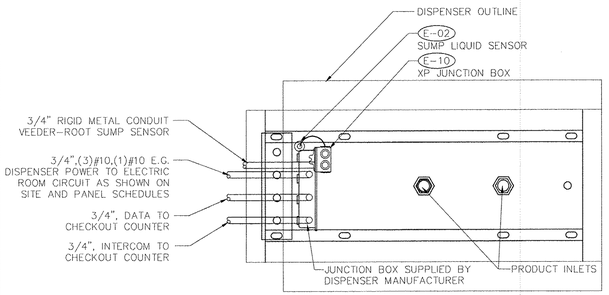

PLAN

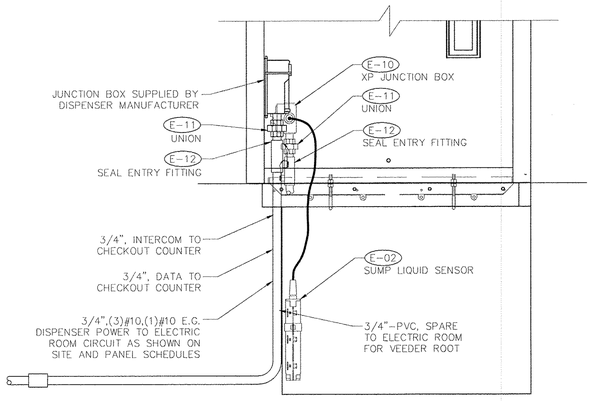

ELEVATION

002 ELECTRICAL CONDUIT DETAIL

SCALE: 1"=1'-0"

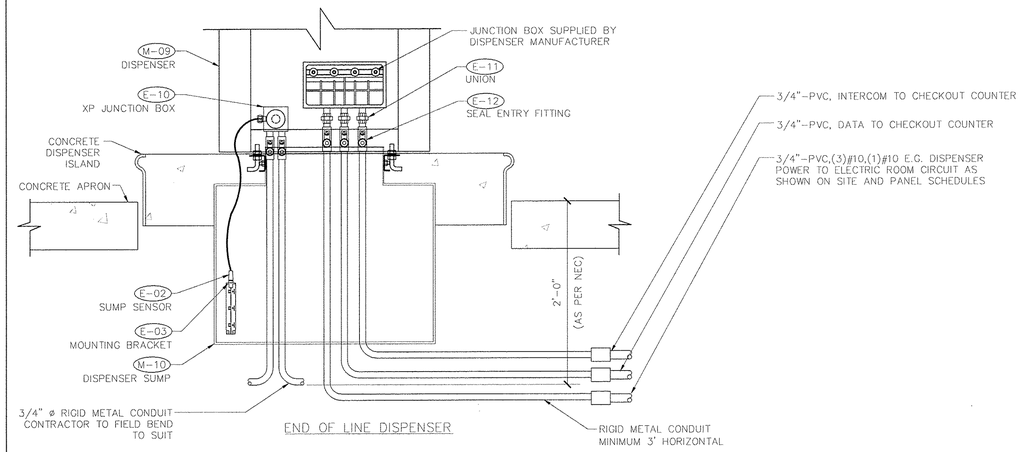

END OF LINE DISPENSER

003 MINIMUM MANUFACTURER'S BACKFILL REQUIREMENTS

SCALE: NTS

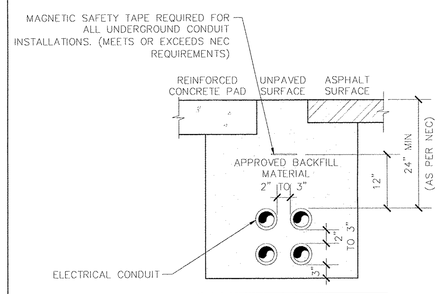

NOTE:
CONDUIT BEDDING AND BACKFILL IN ACCORDANCE WITH CONDUIT MANUFACTURER'S REQUIREMENTS. ALL INSTALLATIONS TO COMPLY WITH N.E.C.

004 UNLEADED TANKS 1-A & 2 SUMP DETAILS – ELEVATIONS

SCALE: 1"=1'-0"

NOTES:
ELECTRICAL EQUIPMENT AND ARRANGEMENT MAY VARY AS PER SPECIFIC SITE CONDITIONS. THIS DRAWING IS FOR REFERENCE ONLY. REFER TO DRAWING F-10 FOR ACTUAL PIPING AND ELECTRICAL LAYOUT.

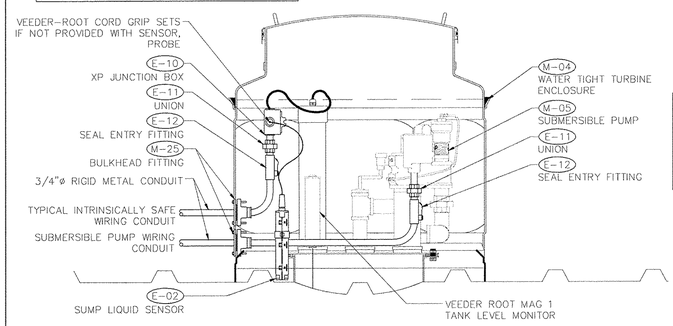

NOTE:
CONTRACTOR TO REPLACE/REPAIR EXISTING STP SUMP AS REQUIRED TO ACCOMMODATE NEW GRADE. COORDINATE WITH RANDY CROWNOVER ((814) 542-5020) AT CONTAINMENT SOLUTIONS.

005 UNLEADED TANKS 1-A & 2 SUMP DETAILS – PLANS

SCALE: NTS

NOTES:
ELECTRICAL EQUIPMENT AND ARRANGEMENT MAY VARY AS PER SPECIFIC SITE CONDITIONS. THIS DRAWING IS FOR REFERENCE ONLY. REFER TO DRAWING F-10 FOR ACTUAL PIPING AND ELECTRICAL LAYOUT.

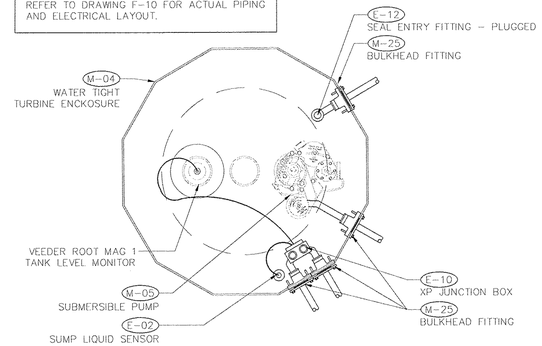

006 PREMIUM & DIESEL TANKS 1-B & 3 SUMP DETAILS – ELEVATIONS

SCALE: 1"=1'-0"

NOTES:
ELECTRICAL EQUIPMENT AND ARRANGEMENT MAY VARY AS PER SPECIFIC SITE CONDITIONS. THIS DRAWING IS FOR REFERENCE ONLY. REFER TO DRAWING F-10 FOR ACTUAL PIPING AND ELECTRICAL LAYOUT.

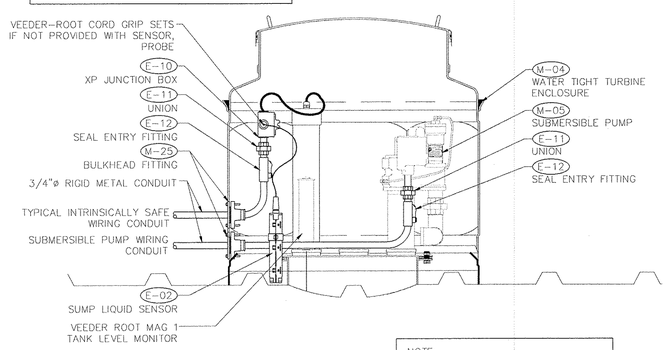

NOTE:
CONTRACTOR TO REPLACE/REPAIR EXISTING STP SUMP AS REQUIRED TO ACCOMMODATE NEW GRADE. COORDINATE WITH RANDY CROWNOVER ((814) 542-5020) AT CONTAINMENT SOLUTIONS.

007 PREMIUM & DIESEL TANKS 1-B & 3 SUMP DETAILS – PLANS

SCALE: NTS

NOTES:
ELECTRICAL EQUIPMENT AND ARRANGEMENT MAY VARY AS PER SPECIFIC SITE CONDITIONS. THIS DRAWING IS FOR REFERENCE ONLY. REFER TO DRAWING F-10 FOR ACTUAL PIPING AND ELECTRICAL LAYOUT.

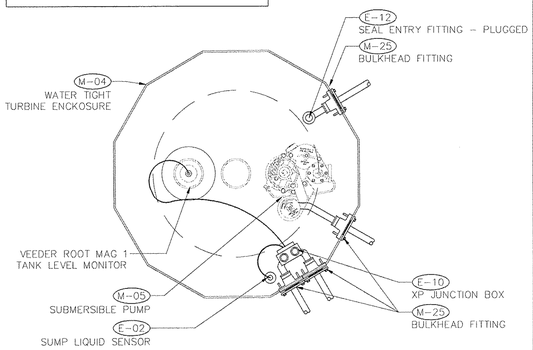

008 INTERSTITIAL SENSOR DETAIL

SCALE: NTS

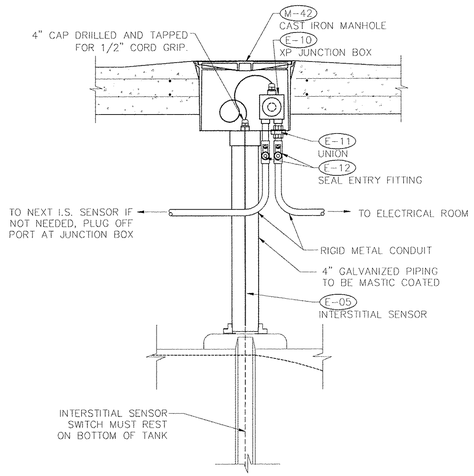

LEGEND
(E-XX) EQUIPMENT DESIGNATION NUMBER SEE DWG. F-1

009 NOT USED

SCALE: NTS

JOHN D. FERGUSON
P.E.# 67173
NOV 01 2012

DAVID M. LEIFFER
P.E.# 68170

NOV 01 2012
F-10

Rev. #	Date	Description

CUMBERLAND FARMS, INC

CUMBERLAND FARMS, INC # V-0636
22905 S.R.7, BOCA RATON, FL
SECTION 25, TOWNSHIP 47 S., RANGE 41 E.

DISPENSER AND TANK ELECTRICAL PLANS, SECTIONS AND DETAILS

Cumberland FARMS
CUMBERLAND FARMS INC.
100 CROSSING BLVD.
FRAMINGHAM, MA 01702

CORE STATES GROUP
1700 Industrial Drive, Suite B
Rogers, AR 72758
Phone (479) 986-4400
FAX (479) 986-4401

Job#:	CFI-12653
Scale:	AS NOTED
Date:	10-12-12
Drawn By:	WLJ
Checked By:	TWP

Documents prepared by Core States Group are to be used only for the specific project and specific use for which they are intended. Any extension of use to other projects, by owner or any other party, without the expressed, written consent of Core States Group is done at the user's own risk. If used in a way other than that specifically intended or without Core States Group's consent, the user shall hold Core States Group harmless from all claims and losses.

JOHN D. FERGUSON LICENSE No. 67173 STATE OF FLORIDA PROFESSIONAL ENGINEER

DAVID M. LEIFFER LICENSE No. 68170 STATE OF FLORIDA PROFESSIONAL ENGINEER

Drawing: N:\Cumberland Farms 2012\Boca Raton, FL\dwgs\12-F12.dwg, Layout

001 STRUCTURAL NOTES AND OUTLINE SPECIFICATIONS

GENERAL

1. ALL WORK SHALL CONFORM TO THE REQUIREMENTS OF ALL APPLICABLE STATE AND LOCAL CODES, INCLUDING BUT NOT LIMITED TO:
   CODES AS LISTED IN THE DESIGN CODE SUMMARY DRAWING 00
   ANSI/ASCE 7–95
   ACI 318–95 "BUILDING CODE REQUIREMENTS FOR REINFORCED CONCRETE"
   ACI 301 "SPECIFICATIONS FOR STRUCTURAL CONCRETE FOR BUILDINGS"
   ANSI/AF&PA NDS–1997
   ACI 530–95/ASCE 5–95/TMS 402–95

   ANY DISCREPANCIES BETWEEN THE ABOVE LISTED CODES AND THE CONSTRUCTION DOCUMENTS SHALL BE BROUGHT TO THE ATTENTION OF THE ENGINEER FOR CLARIFICATION BEFORE PROCEEDING WITH AFFECTED WORK.

   CONTRACTOR SHALL MAINTAIN A COPY OF THE APPROPIATE BUILDING CODES AT THE JOBSITE. CONTRACTOR SHALL READ AND BE FAMILIAR WITH THIS CODE.

2. ALL WORK SHALL BE PERFORMED BY PERSONS QUALIFIED IN THEIR TRADE AND LICENSED TO PRACTICE SUCH TRADE IN THE STATE IN WHICH THE PROJECT IS LOCATED.

3. THESE DRAWINGS SHALL BE USED IN CONJUNCTION WITH ANY ARCHITECTURAL, MECHANICAL, AND ELECTRICAL DRAWINGS IN ADDITION TO SPECIFICATIONS AND ANY SHOP DRAWINGS PROVIDED BY SUBCONTRACTORS AND SUPPLIERS.

4. ALL DIMENSIONS, ELEVATIONS, AND CONDITIONS SHALL BE VERIFIED IN THE FIELD BY THE GENERAL CONTRACTOR (G.C.) AND ANY DISCREPANCIES SHALL BE BROUGHT TO THE ATTENTION OF THE ENGINEER FOR CLARIFICATION BEFORE PROCEEDING WITH THE AFFECTED PART OF WORK.

5. UNLESS OTHERWISE NOTED, DETAILS, SECTIONS, AND NOTES SHOWN ON THESE DRAWINGS SHALL BE CONSIDERED TYPICAL FOR ALL SMILAR DETAILS.

6. THESE DRAWINGS DO NOT SHOW SIZE, LOCATION, OR TYPE OF OPENINGS IN THE FOUNDATION SYSTEM FOR ELECTRICAL, PLUMBING, OR MECHANICAL EQUIPMENT. THE GENERAL CONTRACTOR SHALL BE RESPONSIBLE FOR LOCATING OF THESE ITEMS.

7. ALL SHOP DRAWINGS PROVIDED BY OTHERS SHALL BE SUBMITTED TO THE ENGINEER FOR REVIEW PRIOR TO THE FABRICATION OF MATERIAL OR THE PURCHASE OF NON–RETURNABLE STOCK. DIMENSIONAL REVIEW IS THE CONTRACTOR'S RESPONSIBILITY.

8. ANY AND ALL TEMPORARY BRACING OR SHORING WHICH IS NEEDED TO HOLD THE STRUCTURE IN A SAFE AND STABLE POSITION UNTIL THE BUILDING IS COMPLETE, IS SOLELY THE RESPONSIBILITY OF THE CONTRACTOR. CONSULT INDEPENDENT ENGINEER IF DESIGN ASSISTANCE OR REVIEW IS NEEDED.

CONCRETE

GENERAL – THE CONTRACTOR SHALL VERIFY ALL DIMENSIONS AND REPORT ANY DISCREPANCIES TO THE ENGINEER BEFORE PROCEEDING WITH THE WORK.

FOUNDATION – REFER TO DRAWING A6 FOR SUBGRADE PREPERATION. CONSULT CANOPY MANUFACTURER FOT ITS FOUNDATION/SOIL BEARING REQUIREMENTS. CONSULT KIOSK MANUFACTURER FOR ITS FOUNDATION/SOIL BEARING REQUIREMENTS.

BACKFILL AGAINST FOOTINGS AND IN TRENCHES USING MATERIALS AND PROCEDURES INDICATED ON DRAWING A6.

ALL FOUNDATION WORK SHALL BE CARRIED OUT UNDER THE DIRECTION OF THE GEOTECHNICAL CONSULTANT. IF SOFT OR UNSUITABLE IN–SITU MATERIALS ARE ENCOUNTERED THE GEOTECHNICAL CONSULTANT SHALL BE NOTIFIED AND CORRECTIVE ACTION SHALL BE TAKEN AS DIRECTED.

CONCRETE MIX DESIGNS SHALL BE SUBMITTED FOR REVIEW BY THE ENGINEER 48 HOURS PRIOR TO USE. OBTAIN ENGINEER'S APPROVAL BEFORE USING CONCRETE ADMIXTURES. USE OF CALCIUM CHLORIDE WILL NOT BE PERMITTED.

6. REINFORCING – BILLET STEEL, ASTM A–615, GRADE 60, DEFORMED BARS . ALL DEFORMED CONCRETE REINFORCING BARS ARE TO BE SUPPLIED AND INSTALLED BY THE CONTRACTOR. REINFORCING BAR SPLICES SHALL BE DETAILED AS FOLLOWS: USE 48 BAR DIA. "UNLESS NOTED OTHERWISE". SPLICE LENGTH:
   #2 – 18"
   #3 – 24"
   #5 – 30"
   #6 – 36"
   #8 – 48"

7. ALL FOOTING REINFORCING SHALL CONTINUE THROUGH COLUMN FOOTINGS AND SHALL CONTINUE TO THE ENDS OF THE FOOTINGS WHERE FOOTINGS CHANGE DIRECTION OR STOP.

8. ALL WALL REINFORCING SHALL CONTINUE THROUGH PIER REINFORCING.

9. CONCRETE COVER FOR REINFORCING STEEL:

FOOTINGS	3" BOTTOM (CLEAR)
	2" TOP AND SIDES (CLEAR)
WALLS, PIERS & COLUMNS	2" SIDES (CLEAR)
SLABS ON GRADE	3" BOTTOM (CLEAR)

10. USE SPACERS AND CHAIRS TO ACCURATELY LOCATE AND SUPPORT REINFORCING STEEL AND SECURE IN POSITION TO PREVENT DISPLACEMENT DURING CONCRETE PLACEMENT.

11. MINIMUM TIME FOR FORM WORK REMOVAL TO BE AS FOLLOWS: FOR FOOTINGS,WALLS, PIERS, PILASTERS, AND SLABS – 7 DAYS OR UNTIL 70% OF SPECIFIED COMPRESSIVE STRENGTH IS REACHED & VERIFIED.

12. THE LOCATION OF ALL OPENINGS IN WALLS, SLABS OR FOUNDATIONS SHALL BE APPROVED BY THE STRUCTURAL ENGINEER. SIZE, LOCATION AND TYPE OF OPENINGS FOR ELECTRICAL, MECHANICAL, OR PLUMBING NOT SHOWN, GENERAL CONTRACTOR TO COORDINATE.

13. ALL CONCRETE SHALL BE VIBRATED USING HIGH FREQUENCY VIBRATORS. VIBRATION PRACTICES TO BE IN ACCORDANCE WITH ACI 309R–87.

14. ANCHOR BOLTS (A307)– ANCHOR BOLTS AND EMBEDDED STEEL INSERTS WILL BE SUPPLIED BY THE STRUCTURAL STEEL CONTRACTOR AND INSTALLED BY THE FOUNDATION CONTRACTOR. SET ANCHOR BOLTS, INSERT PLATES, SLEEVES AND OTHER MISCELLANEOUS ITEMS EMBEDDED IN CONCRETE ACCURATELY TO EXACT GRADE AND LOCATION SHOWN ON PROJECT DRAWINGS OR AS DIRECTED BY OWNER'S SITE REPRESENTATIVES. SECURE TO PREVENT DISPLACEMENT DURING CONCRETE PLACEMENT. DO NOT CUT OR RELOCATE REINFORCING STEEL FOR PLACEMENT OF EMBEDDED PARTS. IF INSERTS CANNOT BE LOCATED AS SPECIFIED, OBTAIN APPROVAL OF ALL MODIFICATIONS FROM ENGINEER BEFORE PLACING.

15. CONCRETE CURING COMPOUND TO BE MASTERCURE CR BY MASTER BUILDERS. STERNSON FLORSEAL CPD CHLORINATED RUBBER CURE AND SEAL OR EQUIVALENT LIQUID MEMBRANE CONCRETE CURING COMPOUND. APPLY TWO COATS CURING COMPOUND TO ALL CONCRETE IF EXPOSED TO DRYING CONDITIONS PRIOR TO COMPLETION OF FULL 7 DAY MOIST CURING PERIOD.

16. FLOOR HARDENERS – ALL FLOORS AS NOTED ON ARCH. DWGS/SPECS. TO RECEIVE NONMETALLIC, PREMIXED, PLAIN, ABRASION RESISTANT FLOOR HARDENER. MINIMUM HARDNESS TO BE 6.5 MOH's SCALE. HARDENER TO HAVE ROUGH ANGULAR PARTICLES AND A MINIMUM COMPRESSIVE STRENGTH OF 490000 psi AT 28 DAYS (ASTM C–109–80). ACCEPTABLE MATERIALS: CPD FLOOR HARDENER PREMIX (PREMIUM) OR MASTERCRON BY MASTER BUILDERS OR DURAG PREMIUM BY STERNSON Ltd.

17. SAW CUT SLAB CONTROL JOINT AS LOCATED ON PLAN USING 1/4" THICK BLADE. PLACE 3/8" DIAMETER EXTRUDED CLOSED CELL FOAM (POLYETHYLENE OR URETHANE) BACKER ROD BELOW FINISHED SLAB SURFACE. FILL SAW CUT WITH SELF LEVELING, POLYURETHANE BASE JOINT SEALANT. SEALANT TO BE CLASS "A" TO ASTM C–920, TYPE S, GRADE P, CLASS 25. ACCEPTABLE MATERIAL: SIKAFLEX 1C SL AS MANUFACTURED BY SIKA OR APPROVED EQUAL. BACKER ROD AND SEALANT ONLY REQUIRED ON EXPOSED FLOOR SLABS.
   AS REQUIRED TO MAINTAIN MINIMUM 50 DEGREES °F CONCRETE SURFACE TEMPERATURE FOR A PERIOD OF 5

18. CONCRETE SLABS TO RECEIVE A MINIMUM TWO PASS STEEL TROWELLED SURFACE FINISH TO PRODUCE SMOOTH, HARD, DENSE, BURNISHED CONCRETE SURFACE LEVEL WITHIN 1/8" WHEN MEASURED USING 10'0" STRAIGHT EDGE IN ANY DIRECTION.

19. COLD WEATHER CONCRETE SHALL BE PLACED AND PROTECTED IN ACCORDANCE WITH THE REQUIREMENTS OF ACI–306R–LATEST EDITION. PROVIDE HEATED ENCLOSURES AND/OR INSULATED TARPS

    DAYS FOLLOWING CONCRETE PLACEMENT.

20. FORMED CONCRETE SURFACES SHALL BE SURFACE FINISHED AS SOON AS PRACTICAL AND NOT LATER THAN 6 HOURS FOLLOWING FORM WORK REMOVAL. REMOVE ALL FORM TIES, FINS AND PROJECTIONS. PATCH TIE HOLES, INDENTATIONS AND OTHER SURFACE IRREGULARITIES WITH SAND CEMENT PATCHING MORTAR 3000 PSI. FILL AND REPAIR HONEYCOMB AND HOLES.

21. VERTICAL FORMED SURFACES (i.e. WALLS) SHALL NOT BE MORE THAN 1/8" IN OR OUT OF CONTROL LINE (EXTERIOR FACE).

22. TESTS – TESTS FOR ALL MATERIALS SHALL BE CURRENT WITHIN THE PAST TWELVE (12) MONTHS PRIOR TO USE IN THE WORK. MAKE TESTS AVAILABLE TO THE ENGINEER UPON REQUEST. ANY TESTING REQUIRED BY CITY AGENCIES SHALL BE THE RESPONSIBILITY OF THE CONTRACTOR. ANY LOCAL MORE STRINGENT REQUIREMENTS SHALL TAKE PRECEDENCE OVER THESE SPECIFICATIONS AND BE INCLUDED IN THE CONTRACTOR'S BASE BID.

23. SUBMITTALS REQUIRE NAME AND LOCATION OF CONCRETE SUPPLIER. SUBMIT CONCRETE MIX DESIGN INDICATING AMOUNT OF ALL INGREDIENTS FOR EACH CLASS TO BE USED IN THE WORK.

24. ALL CEMENT SHALL CONFORM TO ASTM C150, TYPE II. TYPE I MAY BE EMPLOYED WITH THE ENGINEER'S APPROVAL.

25. FINE AND COARSE AGGREGATES – SHALL COMPLY IN ALL RESPECTS TO ASTM C33. MAXIMUM SIZE 1 1/2" FOR GENERAL CONCRETE COARSE AGGREGATES. COARSE AGGREGATE SIDEWALKS, CURBS, AND GUTTERS MAXIMUM SIZE 3/4". COARSE AGGREGATE FOR CONCRETE USED FOR SIDEWALKS, CURBS, AND GUTTERS SHALL BE CRUSHED LIMESTONE OR APPROVED EQUAL.

26. WATER – USE PUBLIC POTABLE WATER SUPPLY. CLEAR AND FREE FROM INJURIOUS SUBSTANCES.

27. ADMIXTURES – WATER REDUCING SHALL CONFORM TO ASTM C494, TYPE A AND AIR–ENTRAINING SHALL CONFORM TO ASTM C260.

28. REINFORCING STEEL BARS SHALL BE DEFORMED NEW BILLET STEEL CONFORMING TO ASTM A615, GRADE 60. WIRE FABRIC SHALL BE COLD DRAWN STEEL CONFORMING TO ASTM A185.

29. FILLER JOINT MATERIAL SHALL BE RESILIENT AND NONEXTRUDING TYPE CLOSED CELL FOAM JOINT FILLER, (SOFT GRADE) 3/4" THICKNESS AND OF THE WIDTH REQUIRED FOR FULL DEPTH OF JOINTS.

30. ALL GROUT SHALL BE NON–SHRINK, NONMETALLIC, NON–GAS FORMING, PRE–BLENDED AND READY FOR USE REQUIRING ONLY THE ADDITION OF WATER.

31. CONCRETE MIX DESIGN – MIX DESIGN SHALL BE ESTABLISHED BY THE CONCRETE SUPPLIER BASED ON A PROVEN STRENGTH RECORD FOR CONCRETE MADE WITH SIMILAR INGREDIENTS. SHALL CONFORM TO ACI 211, EXCEPT AS SPECIFIED HEREIN, USING APPROVAL MATERIALS.

32. NORMAL WEIGHT CONCRETE TO DEVELOP A MIN. 28 DAY COMPRESSIVE STRENGTH OF 4000 PSI. MAX. WATER–CEMENT RATIO TO BE 0.40. AIR ENTRAINING ADMIXTURE OF 5.5% FOR 1 1/2" MAX. AGGREGATE AND 6.0% FOR 3/4" MAX. AGGREGATE.

33. SLUMP LIMITS:
    RAMPS, SLABS AND SLOPING SURFACES : NOT MORE THAN 3"(INCHES)
    FOUNDATION : NOT MORE THAN 3"(INCHES)
    CONCRETE CONTAINING HIGH RANGE WATER REDUCING ADMIXTURES (SUPERPLASTICIZER):
    NOT MORE THAN 8"(INCHES) AFTER ADDING ADMIXTURE TO SITE VERIFIED 2–3 INCHES SLUMP CONCRETE.

34. BATCHING – THE CONTRACTOR SHALL HAVE AT HIS DISPOSAL A MODERN AND DEPENDABLE BATCH PLANT WITHIN A REASONABLE DISTANCE FROM THE WORK.

35. MIXING AND DELIVERY SHALL CONFORM TO ASTM C94

36. PLACING CONCRETE SHALL CONFORM TO ACI 304. FORMS SHALL BE SUBSTANTIALLY FREE FROM SURFACE DEFECTS AND SUFFICIENTLY TIGHT TO PREVENT LEAKAGE OF MORTAR. THEY SHALL BE PROPERLY BRACED AND TIED SO AS TO MAINTAIN POSITION AND SHAPE DURING AND AFTER PLACING CONCRETE.

37. THE CONTRACTOR SHALL BUILD INTO THE CONCRETE REINFORCING STEEL, SLEEVES, WATER STOPS, ETC., AS SHOWN ON THE CONTRACT DRAWINGS, OR IN RESTORATION WORK, REINFORCING STEEL AND OTHER EMBEDDED ITEMS EQUAL TO THAT FOUND IN THE CONCRETE BEING REPLACED.

38. ALL CONCRETE SHALL BE THOROUGHLY CONSOLIDATED BY THE USE OF VIBRATORS OR BY SPADING OR PUDDLING STICKS AND TAMPERS. NO CONCRETE SHALL BE DEPOSITED UNDER WATER WITHOUT WRITTEN PERMISSION OF THE ENGINEER AND THEN IN ACCORDANCE WITH PROPER TREMIE TECHNIQUES. COLD WEATHER CONCRETING SHALL CONFORM TO ACI 306 AND HOT WEATHER CONCRETING SHALL CONFORM TO ACI 305.

39. FINISHING – ALL FORMED CONCRETE SURFACES TO BE EXPOSED SHALL BE GIVEN A RUBBED FINISH. IN THE CASE OF RESTORATION, THE RUBBED FINISH SHALL BE EQUAL TO THAT OF THE CONCRETE SURFACE BEING REPLACED. INVERTS, BENCH WALLS, FLOORS, OR STRUCTURES AND SIMILAR SURFACES SHALL BE GIVEN A FLOAT FINISH. SIDEWALKS SHALL BE HAND FLOATED USING A MAGNESIUM FLOAT AND GIVEN A BROOM FINISH PERPENDICULAR TO TRAFFIC, EDGES OF SLABS TO BE TOOLED.

40. FOR OPENINGS THAT ARE LEFT IN NEW CONCRETE OR WHERE MADE IN EXISTING CONCRETE FOR THE INSERTION OF WALL CASTINGS, PIPES, OR OTHER FIXTURES, THE SPACE AROUND THESE ITEMS SHALL BE MADE WATERTIGHT BY COMPLETELY FILLING WITH A NON–SHRINK GROUT UNLESS ANOTHER MEANS IS SPECIFIED ELSEWHERE IN THE CONTRACT DOCUMENTS. ALL WORK SHALL BE DONE IN STRICT ACCORDANCE WITH THE MANUFACTURER'S RECOMMENDATION.

41. THE CONTRACTOR SHALL BE SOLELY RESPONSIBLE FOR THE QUALITY CONTROL OF ALL CONCRETE.

42. CONCRETE WHICH DOES NOT MEET THE REQUIREMENTS OF THESE SPECIFICATIONS MAY BE REJECTED BY THE ENGINEER.

002 ELECTRICAL NOTES AND WIRING SPECIFICATIONS

GENERAL NOTES:

1. ALL EQUIPMENT INDICATED ON THE PLANS SHALL BE PROVIDED (FURNISHED AND INSTALLED) BY THE ELECTRICAL CONTRACTOR UNLESS NOTED OTHERWISE.

2. THE ELECTRICAL CONTRACTOR SHALL FAMILIARIZE HIMSELF WITH THE EXISTING CONDITIONS AND DIFFICULTIES BY VISITING THE JOB SITE AND SHALL BE RESPONSIBLE FOR THE EXECUTION OF ALL THE WORK DESCRIBED IN THE CONTRACT DOCUMENTS (PLANS AND SPECIFICATIONS). NO CLAIMS WILL BE ALLOWED RESULTING FROM ANY DISCREPANCIES.

3. EXISTING CONDITIONS ARE SHOWN AS ACCURATELY AS COULD BE DETERMINED BY FIELD INVESTIGATING AND EXAMINATION OF EXISTING DOCUMENTS. ACTUAL CONDITIONS SHALL BE VERIFIED IN THE FIELD BY THE ELECTRICAL CONTRACTOR. THE ELECTRICAL CONTRACTOR SHALL IMMEDIATELY BRING TO THE ATTENTION OF THE ENGINEER AND ARCHITECT ANY DISCREPANCIES FOUND BETWEEN THE PLANS AND THE ACTUAL CONDITIONS PRIOR TO PROCEEDING WITH THE WORK.

4. ALL MATERIALS SHALL BE NEW AND SHALL CONFORM WITH THE STANDARD OF THE UNDERWRITERS' LABORATORIES, INC. IN EVERY CASE WHERE SUCH A STANDARD, LISTING OR LABEL HAS BEEN ESTABLISHED FOR THE PARTICULAR TYPE OF MATERIAL IN QUESTION.

5. ALL WORK SHALL BE INSTALLED IN ACCORDANCE WITH THE LAWS, ORDINANCES, RULES AND REGULATIONS OR ALL AUTHORITIES HAVING JURISDICTION, AND OF ANY PUBLIC UTILITIES PROVIDING SERVICE TO THE BUILDING, AND AS HEREINAFTER SPECIFIED.
   1. FLORIDA STATE BUILDING CODE
   2. NATIONAL ELECTRICAL MANUFACTURERS' ASSOCIATION (NEMA).
   3. NATIONAL BOARD OF FIRE UNDERWRITERS (NBFU).
   4. ASSOCIATED FACTORY MUTUAL FIRE INSURANCE COMPANIES (FM).
   5. OCCUPATIONAL SAFETY HEALTH ADMINISTRATION (OSHA).
   6. AMERICAN NATIONAL STANDARDS INSTITUTE (ANSI).
   7. NATIONAL FIRE PROTECTION ASSOCIATION (NFPA).
   8. MASSACHUSETTS DEPARTMENT OF PUBLIC SAFETY.
   9. NATIONAL BUREAU OF STANDARDS (NBS).
   10. UNDERWRITERS' LABORATORIES, INC. (UL).
   11. ALL LOCAL CODES.
   ALL STANDARDS REFERRED TO ABOVE SHALL BE THE LATEST EDITION.

6. ELECTRICAL WORK SHALL BE DONE IN ACCORDANCE WITH THE CURRENT EDITION OF THE NATIONAL ELECTRICAL CODE (NFPA 70) AS PUBLISHED BY THE NATIONAL FIRE PROTECTION ASSOCIATION.

7. THE ELECTRICAL CONTRACTOR SHALL OBTAIN ALL PERMITS, PAY ALL FEES AND GIVE ALL PROPER AUTHORITIES ALL REQUISITE NOTICES.

8. NAMES OF EQUIPMENT MANUFACTURERS, CATALOG NUMBERS, MODELS OR TYPES, WHEN USED ON THE DRAWINGS AND IN THE SPECIFICATIONS ARE INTENDED TO INDICATE THE STANDARDS OF TYPE AND QUALITY OF MATERIAL, WHEN APPARATUS OR EQUIPMENT IS MENTIONED, ANY FIRST CLASS PRODUCT MADE BY A REPUTABLE MANUFACTURER MAY BE USED PROVIDING IT CONFORMS TO THE REQUIREMENTS OF THE SPECIFICATIONS AND MEETS WITH THE APPROVAL OF THE ENGINEER. WHERE TWO OR MORE UNITS OF THE SAME CLASS OF EQUIPMENT ARE REQUIRED THESE UNITS SHALL BE THE PRODUCT OF A SINGLE MANUFACTURER. SHOULD THE ELECTRICAL CONTRACTOR DESIRE TO SUBSTITUTE OTHER MAKES OF MATERIAL, APPARATUS OR EQUIPMENT FOR SPECIFIC ITEMS INDICATED ON THE DRAWINGS OR IN THE SPECIFICATIONS, HE SHALL MAKE THE REQUEST IN ONE OF THE FOLLOWING WAYS AND WITH THE FOLLOWING PROVISIONS:

   A. BY A SEPARATE ALTERNATE PROPOSAL TO THE OWNER, BASED ON PROVIDING THE PROPOSED SUBSTITUTE. SUCH PROPOSAL SHALL BE ACCOMPANIED BY COMPLETE DRAWINGS AND SPECIFICATIONS OF THE SUBSTITUTE, INCLUDING MANUFACTURER, BRAND NAME, CATALOG NUMBER AND SUCH OTHER DATA. WHERE SUCH SUBSTITUTES ALTER THE DESIGN OR SPACE REQUIREMENTS, THE ELECTRICAL CONTRACTOR SHALL INCLUDE ALL ITEMS OF COST FOR THE REVISED DESIGN AND CONSTRUCTION INCLUDING COST OF ALL TRADES INVOLVED.

   B. BY MAKING A REQUEST TO THE ENGINEER WITHIN 30 DAYS AFTER THE AWARD OF THE CONTRACT TO BE ALLOWED TO MAKE THE SUBSTITUTION. THIS REQUEST SHALL BE ACCOMPLISHED BY COMPLETE DRAWINGS AND SPECIFICATIONS OF THE SUBSTITUTE OFFERED.

   C. ACCEPTANCE OR REJECTION OF THE PROPOSED SUBSTITUTIONS SHALL BE SUBJECT TO APPROVAL BY THE ENGINEER AND THE ARCHITECT.

   D. THE SUBSTITUTE OFFERED SHALL NOT INVOLVE A CHANGE IN THE BASIC DESIGN OF THE SPECIFIED SYSTEM.

   E. THE ELECTRICAL CONTRACTOR SHALL SUBMIT SAMPLES OF BOTH THE SPECIFIED ITEM AND THE SUBSTITUTE WHEN SO REQUESTED BY THE ENGINEER.

   F. IN THE EVENT THAT SUBSTITUTES ARE ACCEPTED, THE NET COST PLUS INSTALLATION COST OF THOSE ITEMS SPECIFIED, THE CONTRACT PRICE SHALL BE REDUCED BY AN AMOUNT EQUAL TO THE DIFFERENCE IN THE ABOVE COSTS BETWEEN THEM.

   G. IF THE ITEMS OFFERED FOR SUBSTITUTION ARE, IN THE OPINION OF THE ENGINEER EQUAL TO OR BETTER THAN THOSE SPECIFIED, OR THE PRICE DIFFERENTIAL IS SUCH THAT THE SUBSTITUTE ITEM IS A BETTER INVESTMENT, THEN THE SUBSTITUTE WILL BE GIVEN CONSIDERATION.

9. THE DRAWINGS SHOW THE LAYOUT OF THE ELECTRICAL SYSTEM AND INDICATES THE APPROXIMATE LOCATIONS OF OUTLETS, APPARATUS AND EQUIPMENT. THE RUNS OF FEEDERS AND BRANCHES AS INDICATED ARE SCHEMATIC ONLY. THE EXACT ROUTING OF CONDUIT SHALL BE DETERMINED BY THE STRUCTURAL CONDITIONS AND OTHER OBSTRUCTIONS. THIS SHALL NOT BE CONSTRUED TO MEAN THAT THE DESIGN OF THE SYSTEMS MAY BE CHANGED BUT REFERS ONLY TO EXACT RUNS OF CONDUIT BETWEEN GIVEN POINTS.

10. CONSULT ALL CONTRACT DRAWINGS WHICH MAY AFFECT THE LOCATION OF ANY OUTLETS, APPARATUS AND EQUIPMENT TO AVOID POSSIBLE INTERFERENCE AND PERMIT FULL COORDINATION OF ALL WORK. THE RIGHT TO MAKE ANY REASONABLE CHANGE IN LOCATION OF OUTLETS, APPARATUS AND EQUIPMENT UP TO THE TIME OF ROUGHING–IN IS RESERVED BY THE ENGINEER AND SUCH CHANGE SHALL BE MADE WITHOUT ADDITIONAL EXPENSE TO THE OWNER.

11. THE ELECTRICAL CONTRACTOR SHALL MAINTAIN AT THE JOB SITE AT ALL TIMES, A COMPLETE SET OF BLUELINE PRINTS OF THE ELECTRICAL WORK ON WHICH SHALL BE MARKED, CLEARLY, NEATLY, ACCURATELY AND PROMPTLY AS THE WORK PROGRESSES.

12. IT SHALL BE THE RESPONSIBILITY OF THE ELECTRICAL CONTRACTOR TO SEE THAT ALL ELECTRICAL EQUIPMENT SUCH AS JUNCTION AND PULL BOXES, PANELBOARDS, SWITCHES, CONTROLS AND SUCH OTHER APPARATUS AS MAY REQUIRE MAINTENANCE AND OPERATION FROM TIME TO TIME IS MADE EASILY ACCESSIBLE. ALTHOUGH THE EQUIPMENT MAY BE SHOWN ON THE DRAWINGS IN CERTAIN LOCATIONS, THE CONSTRUCTION MAY DISCLOSE THE FACT THAT SUCH LOCATIONS DO NOT MAKE ITS POSITION READILY ACCESSIBLE. IN SUCH CASES, THE ELECTRICAL CONTRACTOR SHALL CALL THE ATTENTION OF THE ENGINEER TO THE CONDITION BEFORE ADVANCING THE CONSTRUCTION TO A STATE WHERE A CHANGE WILL REFLECT ADDITIONAL EXPENSES.

13. THE ELECTRICAL CONTRACTOR SHALL BE RESPONSIBLE FOR FURNISHING ALL TOOLS, EQUIPMENT, SCAFFOLDING AND OTHER TEMPORARY CONSTRUCTION MATERIAL REQUIRED FOR THE EXECUTION OF THE WORK.

14. ADDRESS ALL QUESTIONS REGARDING SCOPE OF WORK, INTENT OF SPECIFICATIONS AND DRAWINGS TO ELECTRICAL ENGINEER IN WRITING PRIOR TO AWARD OF CONTRACT. ELECTRICAL ENGINEER'S INTERPRETATION OF SCOPE OF WORK AND/OR INTENT OF SPECIFICATIONS AND DRAWING SHALL BE FINAL.

15. EACH TRADE SHALL PROVIDE AND MAINTAIN, AT ITS OWN EXPENSE, ALL TEMPORARY WIRING, EXTENSION CORDS, LIGHTING, APPURTENANCES AND ACCESSORIES FOR LIGHTS OR POWER TOOLS REQUIRED IN ADDITION TO AN BEYOND THE OUTLETS MENTIONED ABOVE FOR THEIR OWN RESPECTIVE WORK REQUIREMENTS FOR TEMPORARY POWER AND FOR TEMPORARY LIGHTING.

16. THE COST OF ELECTRICAL ENERGY USED FOR TEMPORARY POWER AND LIGHTING FOR THE WORK OF ALL TRADES SHALL BE BORNE BY THE OWNER.

17. UPON COMPLETION OF THE WORK OF ALL TRADES AND BEFORE FINAL ACCEPTANCE OF THE ENTIRE PROJECT, EACH TRADE SHALL REMOVE, AT HIS OWN EXPENSE ALL WIRING APPURTENANCES AND ACCESSORIES USED IN THE PERFORMANCE OF ITS RESPECTIVE WORK TO THE COMPLETE SATISFACTION OF THE ENGINEER AND ARCHITECT.

18. THE ELECTRICAL CONTRACTOR SHALL BE RESPONSIBLE FOR CORRECT VOLTAGES, TAP SETTINGS AND CORRECT PHASE DESIGNATIONS ON ALL EQUIPMENT.

19. FAILURE OR DEFECTS IN WORKMANSHIP OR MATERIALS REVEALED BY TESTS OR INSPECTION SHALL BE CORRECTED PROMPTLY. DEFECTIVE MATERIAL SHALL BE REPLACED PROMPTLY AT NO ADDITIONAL EXPENSE TO THE OWNER.

20. THE ELECTRICAL CONTRACTOR SHALL ARRANGE TO HAVE THE CONDUIT, PANELBOARDS, BOXES AND SUCH OTHER PERTINENT PARTS SET IN PLACE AHEAD OF THE CONSTRUCTION WORK SO THAT THESE WILL BE BUILT IN THE STRUCTURE AND ELIMINATE THE NEED FOR CUTTING AND PATCHING.

21. THE ELECTRICAL CONTRACTOR SHALL ARRANGE WITH THE ELECTRIC UTILITY FOR ALL SWITCHING, CONNECTING, TAPPING AND PHASING ON THE NETWORK.

22. THE ELECTRICAL CONTRACTOR SHALL FIELD COORDINATE THE EXACT LOCATION AND ORIENTATION WITH THE ELECTRIC UTILITY COMPANY OF SERVICE CONDUCTORS ENTERING VAULT.

23. ELECTRICAL SYSTEMS SHALL BE GROUNDED IN ACCORDANCE WITH ARTICLE 250 OF THE NATIONAL ELECTRICAL CODE.

24. CONDUIT SHALL BE 3/4"C AS A MINIMUM. RUN EXPOSED CIRCUITRY FLUSH TO STRUCTURE
    CONDUIT (EMT) SHALL BE 3/4"C AS A MINIMUM. RUN EXPOSED CIRCUITRY FLUSH TO STRUCTURE NEATLY, RECTILINEARLY AND PARALLEL OR PERPENDICULAR TO WALLS AND CEILINGS.
    RACEWAYS INSTALLED IN EXPOSED AREAS WITHIN THE BUILDING SHALL BE SURFACE METAL RACEWAY SIMILAR AND EQUAL TO "WIREMOLD COMPANY, 60 WOODLAWN ST., WEST HARTFORD, CT" COLOR SHALL BE IVORY OR ALMOND AS SELECTED. ALL EXPOSED RUNS SHALL BE REVIEWED FIRST WITH THE ARCHITECT.

25. FURNISH AND INSTALL ALL FIXTURES AND LAMPS, COMPLETE WITH ALL NECESSARY SUPPORTS, ETC.., AS CALLED FOR IN THE FIXTURE SCHEDULE. ALL FIXTURES SHALL BE SUPPORTED INDEPENDENTLY OF THE CEILING SYSTEM AND ATTACHED DIRECTLY TO THE BUILDING STRUCTURE. EXACT LOCATIONS OF ALL CEILING MOUNTED EQUIPMENT, LIGHTING FIXTURES ETC. SHALL BE DETERMINED BY THE REFLECTED CEILING PLAN.

26. ALL PENETRATIONS THRU WALLS, FLOORS & ROOFS SHALL BE SEALED WITH AN APPROPRIATE FIRESTOP SYSTEM AS INDICATED IN THE SPECIFICATION

27. DRAWINGS INDICATE GENERAL ARRANGEMENT OF SYSTEMS. PROVIDE INFORMATION AND COMPONENTS SHOWN ON RISER DIAGRAMS, BUT NOT SHOWN ON PLANS AND VICE VERSA, AS IF EXPRESSLY REQUIRED ON BOTH.

28. IT IS NOT THE INTENTION OF THESE DRAWINGS THAT EVERY HANGER, WIRE OR DEVICE BE SHOWN. ALL SUCH ITEMS SHALL BE FURNISHED AND INSTALLED AS NECESSARY TO COMPLETE THE ELECTRICAL SYSTEM AS USUALLY GIVEN TO THE TRADE (INCLUDING ANY REQUIREMENTS BY THE POWER COMPANY). ELECTRICAL CONTRACTOR SHALL REFER TO THE ARCHITECTURAL, CIVIL, H.V.A.C., PLUMBING AND SPRINKLER DRAWINGS FOR LOCATION OF EQUIPMENT, LOADS, ETC... RESPONSIBILITY FOR FURNISHING AND INSTALLING ALL POWER WIRING NECESSARY TO ACCOMMODATE THE EQUIPMENT AND MOTORS OF THESE TRADES RESTS WITH THIS ELECTRICAL CONTRACTOR. PROVIDE ALL WIRING TO FORM A COMPLETE INSTALLATION.

29. PROVIDE ALL TEMPORARY ELECTRICAL WORK REQUIRED BY CONTRACT OF OPERATION, TO KEEP SUCH POWER, CONTROL, TELEPHONE AND FIRE ALARM FACILITIES AS MAY BE FED FROM EXISTING CIRCUITS OR FEEDERS WITHIN CONSTRUCTION AREAS IN OPERATION DURING CONSTRUCTION. INTERRUPTION TO THE OPERATION OF ANY PARTICULAR EQUIPMENT OR FACILITY AS REQUIRED FOR MAKING TIE–IN CONNECTIONS OR ALTERATIONS TO THE EXISTING SYSTEM, SHALL BE MADE ONLY AT SUCH TIMES AND FOR THE LENGTH OF TIME DESIGNATED BY THE OWNER OR AUTHORITY HAVING JURISDICTION.

30. THE COMPLETE ELECTRICAL INSTALLATION, INCLUDING MATERIALS, SHALL BE INSTALLED, WIRED AND GROUNDED IN ACCORDANCE WITH THE LATEST RULES AND REGULATIONS OF THE NATIONAL ELECTRIC CODE, LOCAL ORDINANCES, LAWS AND TERMINATION REQUIREMENTS BY THE LOCAL POWER COMPANY.

31. EMT INSTALLED IN DRY LOCATION PROVIDE SET SCREW STEEL CONNECTORS AND COUPLINGS (DIE CAST CONNECTORS AND COUPLINGS WILL NOT BE PERMITTED).

32. COMMON NEUTRALS WILL NOT BE PERMITTED.

33. RECONNECT EXISTING TO REMAIN CIRCUITS BROKEN DURING DEMOLITION.
    PROVIDE CONDUIT AND WIRE TO KEEP CIRCUIT COMPLETE

34. UPON COMPLETION OF THE WORK PROVIDE THE ARCHITECT FOR HIS APPROVAL, OPERATING MANUALS CONTAINING APPROVED SHOP DRAWINGS AND DETAILS AND TYPEWRITTEN INSTRUCTIONS RELATIVE TO THE CARE AND OPERATION OF THE EQUIPMENT, ALL PROPERLY INDEXED AND BOUND.
    FAILURE OR DEFECTS IN WORKMANSHIP OR MATERIALS REVEALED BY TESTS OR INSPECTION SHALL BE CORRECTED PROMPTLY. DEFECTIVE MATERIAL SHALL BE REPLACED PROMPTLY AT NO ADDITIONAL EXPENSE TO THE OWNER.

    A. MANUALS SHALL INCLUDE, BUT NOT BE LIMITED TO, ONE COPY OF CORRECTED SHOP DRAWINGS, PARTS LIST, WIRING DIAGRAMS, CATALOG DATA, AND COMPLETE MAINTENANCE PROCEDURE.

    B. THE OPERATION INSTRUCTIONS SHALL BE SPECIFIC FOR EACH

001 MECHANICAL SPECIFICATIONS

SECTION C
PIPING SPECIFICATIONS

1.00 GENERAL

A. IT IS REQUIRED THAT ONLY "CERTIFIED INSTALLERS BE USED FOR INSTALLATION OF THE PIPING SYSTEM TO ENSURE THAT PROPER PIPE FABRICATION, COUPLING AND INSTALLATION IS PERFORMED. "CERTIFIED INSTALLERS" ARE EQUIPPED WITH FACTORY MANUFACTURED COUPLING EQUIPMENT AND INSTALLATION TOOLS AND HAVE RECEIVED FACTORY TRAINING BY A SMITH FIBERCAST REPRESENTATIVE ON THE PROPER INSTALLATION AND TESTING PROCEDURES.
THIS ENVIRONMENTALLY SAFE, FRP UNDERGROUND PIPING SYSTEM PROVIDES PIPING RUNS BETWEEN UNDERGROUND STORAGE TANKS AND THE PRODUCT DISPENSERS.
A UNIQUE FRP DW DESIGN, HAVING BOTH THE INNER PRIMARY SUPPLY PIPE AND OTHER SECONDARY CONTAINMENT PIPE ALL IN ONE, THE SECONDARY CONTAINMENT JACKET IS SEPARATED BY STAND-OFF MATERIAL, CREATING A SMALL INTERSTITIAL SPACE WHICH ALLOWS FOR OPTIMUM FLOW AND HAS EXCELLENT BURIAL STRENGTH.

B. ALL PRODUCT PIPING IS TO BE FRP DW PRIMARY FUEL PIPE OF SPECIFIED DIAMETER. ALL PRIMARY PIPING TO BE INSTALLED IN ACCORDANCE WITH MANUFACTURER'S INSTRUCTIONS.

C. WHERE FLEX CONNECTORS ARE COMPLETELY CONTAINED (NOT IN CONTACT WITH GROUND WATER, NATIVE SOIL OR BURIAL MATERIAL), FIRE SAFE STAINLESS STEEL CONNECTORS ARE ACCEPTABLE. WHERE FLEX CONNECTORS ARE NOT COMPLETELY CONTAINED, ONLY ANTI-CORROSION CONNECTORS MAY BE USED.

D. THE GENERAL CONTRACTOR ACCEPTS FULL RESPONSIBILITY FOR PROPER HANDLING AND INSTALLATION OF PIPING SYSTEM. THE GENERAL CONTRACTOR SHALL INSURE THAT GOOD WORKMANSHIP AND CONSTRUCTION PROCEDURES ARE FOLLOWED THROUGHOUT THE INSTALLATION, REGARDLESS OF INCLUSION OR OMISSION OF ANY APPLICABLE SUGGESTION IN THESE INSTRUCTIONS OR ON THE DRAWINGS.

E. UNKNOWN SITUATIONS OR CONDITIONS NOT COVERED IN THESE INSTRUCTIONS ARE THE RESPONSIBILITY OF THE CONTRACTOR. MANUFACTURER'S SPECIALISTS ARE AVAILABLE FOR CONSULTATION. THE PRESENCE OF THE OWNER'S OR MANUFACTURER'S REPRESENTATIVE AT AN INSTALLATION SITE DOES NOT RELIEVE THE CONTRACTOR OF THE RESPONSIBILITY FOR A PROPER INSTALLATION.
THE CONTRACTOR SHALL BE RESPONSIBLE FOR THE PROPER SAFEGUARDING OF THE INSTALLATION AND MATERIALS AND EQUIPMENT STORED ON THE SITE TO PREVENT THEFT, VANDALISM OR DAMAGE.

2.00 SCOPE OF WORK

A. THE PIPING SYSTEM TO BE INSTALLED UNDER THIS SECTION WILL INCLUDE PRODUCT AND VENT PIPING AND APPLICABLE VAPOR PIPING AS SHOWN ON THE PLANS OR COVERED IN THE ADDENDA TO THESE SPECIFICATIONS. INCLUDED ARE APPROPRIATE CONNECTIONS AND APPURTENANCES TO THE INSTALLED EQUIPMENT IN THE COMPLETE SYSTEM, E.G. THICKNESS TANKS, PUMPS, DISPENSERS AND INDICATED VAPOR CONTROL OR RECOVERY EQUIPMENT. CONTRACTOR SHALL REFER TO THE PLANS FOR THE ORIENTATION OF CONNECTIONS AT TANKS AND PIPE CHASES FOR PIPING.

3.00 PIPING MATERIALS

B. PRODUCT PIPING SHALL BE 2" FRP DW AND SECONDARY CONTAINMENT PIPING SHALL BE 3" FRP DW PIPING AS MANUFACTURED BY SMITH FIBERCAST.
C. UNDERGROUND VENT AND VAPOR RECOVERY PIPING SHALL BE 2" AND 3" FRP DW PIPING AS MANUFACTURED BY SMITH FIBERCAST.
D. FLEXIBLE CONNECTORS ARE STANDARD STAINLESS STEEL AND ARE TO BE APPROVED BY THE OWNER AND OR HIS REPRESENTATIVE.

4.00 PIPING INSTALLATION

A. STORAGE AND HANDLING, STRINGING, JOINING, LAYOUT AND PREPARATION FOR INSTALLATION, CUTTING, SPLICING, AND/OR ADAPTING TO STEEL PIPING OR FLEXIBLE CONNECTORS SHALL BE IN ACCORDANCE WITH MANUFACTURER'S INSTRUCTIONS OR RECOMMENDATIONS. CONTRACTOR MUST BE FAMILIAR WITH SUCH PRACTICES AND PROCEDURES AND FOLLOW SAME UNLESS CERTAIN INSTRUCTIONS WHICH ARE SPECIFICALLY COVERED IN THESE SPECIFICATIONS, I.E. PIPE BURIAL, SEEM TO BE IN VARIANCE. IN SUCH CASE, THESE SPECIFICATIONS WILL BE FOLLOWED.

A. ALL UNCONNECTED PIPE STUBS OR RUNS SHALL BE PROTECTED DURING CONSTRUCTION AGAINST THE INTRUSION OF NATIVE SOIL OR OTHER FOREIGN MATERIAL IN THE PIPING SYSTEM. PROTECTIVE CAPS USED IN SHIPPING THE PIPE ARE SUITABLE IF TAPED IN PLACE.

C. IMPORTANT: PLEASE READ ALL WARNINGS AND FOLLOW THE INSTALLATION INSTRUCTIONS COMPLETELY AND CAREFULLY. FAILURE TO DO SO MAY CAUSE PRODUCT FAILURE, OR RESULT IN ENVIRONMENTAL CONTAMINATION DUE TO LIQUID LEAKAGE INTO THE SOIL, CREATING HAZARDOUS SPILL CONDITIONS.

D. WARNING-DANGER: USING ELECTRICALLY-OPERATED EQUIPMENT NEAR GASOLINE OR GASOLINE VAPORS MAY RESULT IN FIRE OR EXPLOSION, CAUSING PERSONAL INJURY AND PROPERTY DAMAGE. BE SURE THAT THE WORKING AREA IS FREE FROM SUCH HAZARDS, AND ALWAYS USE PROPER PRECAUTIONS.

4.01 PIPING SYSTEM LAYOUT

A. DETERMINE THE OPTIMUM PIPING LAYOUT. DISPENSERS ARE PIPED IN SERIES IN PRESSURE SYSTEMS. ALL PIPING RUNS MUST BE CONTINUOUS WITH ALL PIPING CONTAINED WITHIN A SUMP. TYPICAL PRESSURE PIPING LAYOUTS INCLUDE A SINGLE SERIES LAYOUT AND A DUAL LINE SERIES LAYOUT.

B. IMPORTANT: PIPING SYSTEMS MUST BE INSTALLED IN ACCORDANCE WITH ALL PREVAILING FEDERAL, STATE, LOCAL CODES AND ALL APPLICABLE INSTALLATION INSTRUCTIONS.

C. WHERE REPAIRS ARE FOUND TO BE REQUIRED DURING CONSTRUCTION, AFTER TESTING OR INSPECTION, THE DEFECTIVE PORTION TESTED THE PIPING SHALL BE REMOVED AND REPLACED WITH APPROPRIATE NEW PIPE AND FITTINGS.

D. OWNER TO BE FURNISHED WITH ALL DOCUMENTATION AND CERTIFICATES FROM SMITH FIBERCAST FOR THE PIPING, ENTRY BOOTS, PIPING FITTING, ETC.
SYSTEM SHOWN OF THE DRAWING ARE FOR A LIQUID TIGHT PRESSURE SYSTEM THAT REQUIRED CERTIFICATION OF THE PIPING MANUFACTURE.

4.02 PIPING TRENCH AND PIPE BURIAL REQUIREMENTS

4.02.01 PIPING TRENCH REQUIREMENTS

A. -MINIMUM SEPARATION BETWEEN PIPES : 4"
B. -MINIMUM SEPARATION BETWEEN PIPE AND TRENCH WALL : 6"
C. -MINIMUM BENDING RADIUS - DIRECT BURY SYSTEMS : 0"
D. -TRENCH BOTTOMS MUST BE UNIFORM AND CONTAIN A BEDDING LAYER OF AT LEAST 6" OF APPROVED BACKFILL.
E. -A MINIMUM SLOPE OF 1/8" PER FOOT MUST BE MAINTAINED. (REFER TO LOCAL CODE REGULATIONS FOR SPECIFIC SLOPE REQUIREMENTS)

4.02.01 PIPE BURIAL REQUIREMENTS

A. -UNPAVED SURFACE - PROVIDE A MINIMUM OF 18" OF APPROVED BACKFILL MATERIAL BETWEEN THE TOP OF THE FLEXIBLE PIPING AND UNPAVED SURFACES.
B. -ASPHALT SURFACE - PROVIDE A MINIMUM OF 8" OF APPROVED BACKFILL BETWEEN THE TOP OF THE FLEXIBLE PIPING AND THE BOTTOM OF A 4" MINIMUM DEEP ASPHALT SURFACE.
C. -CONCRETE SURFACE - PROVIDE A MINIMUM OF 4" OF APPROVED BACKFILL MATERIAL BETWEEN THE TOP OF THE FLEXIBLE PIPING AND THE BOTTOM OF A 4" MINIMUM DEEP REINFORCED CONCRETE SURFACE.

4.02.03 APPROVED BEDDING AND BACKFILL MATERIALS

A. -ROUNDED PEA GRAVEL WITH A MINIMUM DIAMETER OF 1/8" AND A MAXIMUM DIAMETER OF 3/4".
B. -CRUSHED STONE OF THE FREE FLOWING TYPE WITH AN ANGULAR STONE SIZE BETWEEN 1/8" AND 1/2". (MEETS ASTM C-33 PARADRAPH 9.1 REQUIREMENTS)

4.03 FLEXIBLE PIPING SYSTEM INSTALLATION

A. PIPING SYSTEMS CAN BE INSTALLED IN VARIOUS CONFIGURATIONS INCLUDING:
- DIRECT BURIAL FRP DW DOUBLE WALL PIPE FOR PRODUCT
- SINGLE WALL PIPE FOR VENT / VAPOR RECOVERY

THE FLEXIBLE ENTRY FITTINGS AND TEST BOOTS REQUIRED WILL VARY DEPENDING ON WHICH SYSTEM IS TO BE INSTALLED (REFER TO THE FLEXIBLE PRICE BOOK FOR SPECIFIC ORDERING SPECIFICATIONS).

B. DIRECT BURY SYSTEMS CONSIST OF A DOUBLE WALL FRP DW PRIMARY PIPE INSTALLED DIRECTLY IN THE PIPING TRENCH. AN OUTER PIPE FORMS AN INTERSTITIAL SPACE THAT PROVIDES SECONDARY CONTAINMENT.

4.03.01 TANK SUMP/DISPENSER SUMP/ENTRY FITTING INSTALLATION

A. SET THE TANK AND DISPENSER SUMPS, AND INSTALL ENTRY FITTINGS.
1. -TANKS SUMPS ARE AVAILABLE IN VARIOUS HEIGHTS AND ARE FIELD ADJUSTABLE TO ACCOMMODATE VARYING TANK BURIAL DEPTHS. TANK SUMPS ARE ALSO AVAILABLE IN DIAMETERS FOR USE WITH BOTH 36" AND 42" MANHOLES.
2. -DISPENSER SUMPS ARE CUSTOM DESIGNED TO MATCH THE FOOTPRINT OF EACH PARTICULAR DISPENSER MODEL.
3. -ENTRY FITTINGS ARE (BOLTED FLANGE) AND IN VARIOUS SIZES TO ACCOMMODATE PIPE), DIRECT BURY FRP DW PIPE, FRP VENT PIPE, AND ELECTRICAL CONDUIT.

4.03.02 MEASURE, CUT AND INSTALL ACCESS/CONTAINMENT PIPING RUNS

A. BEFORE CUTTING ANY PIPE SECTIONS, MEASURE AND RECORD ALL PIPING RUNS ON THE FLEXIBLE SITE LAYOUT PLAN.
B. -TIGHTEN ENTRY FITTING BAND CLAMPS INSIDE THE SUMPS AND TRIM EXCESS ACCESS/CONTAINMENT PIPE ENDS.

4.03.03 MEASURE AND CUT PRIMARY PIPE

A. BEFORE CUTTING ANY PIPE SECTIONS, MEASURE AND RECORD ALL PIPING RUNS ON THE SITE LAYOUT PLAN.
B. -PRIMARY PIPE - MEASURE AND RECORD THE FACE TO FACE DISTANCE BETWEEN CORRESPONDING PRIMARY PIPE FITTINGS INSIDE EACH SUMP FOR EACH PIPING RUN. BE SURE TO LAY THE TAPE MEASURE IN THE PIPING TRENCH ALONG THE EXACT PATH THAT THE PIPE IS TO FOLLOW.

4.03.04 REMOVE JACKET FROM PIPE ENDS

A. THE JACKET ON THE FRP DW PIPE MUST BE STRIPPED OFF THE END OF EACH FRP DW PIPE SECTION BEFORE ATTACHING THE PRIMARY PIPE FITTINGS. USE THE FRP DW JACKET STRIPPER TOOL TO REMOVE THE JACKET SECTION.

4.03.05 ATTACH FITTINGS TO PRIMARY PIPE

A. A FRP TAPPER MACHINE IS REQUIRED TO ATTACH PRIMARY PIPE FITTINGS TO PRIMARY PIPE. THIS MACHINES ARE AVAILABLE IN MANUALLY, ELECTRICALLY, BATTERY, AND PNEUMATICALLY OPERATED MODELS. CONSULT YOUR LOCAL FLEXIBLE DISTRIBUTOR FOR THE AVAILABILITY FOR RENTAL OR PURCHASE OF FLEXIBLE COUPLING MACHINES.

4.03.06 INSTALL PRIMARY PIPE SECTIONS

A. AFTER FITTINGS ONTO A PRIMARY PIPE SECTION, INSERT EACH END INTO THE APPROPRIATE CONTAINMENT SUMP THROUGH THE ENTRY FITTING.
B. IMPORTANT:PRIOR TO CONNECTING THE PRIMARY PIPE FITTINGS TO THE PRIMARY PIPE FITTING INSTALL THE APPROPRIATE TEST BOOTS OVER THE END OF THE PIPE SECTION.
C. CONNECT PRIMARY FITTINGS TO THE PRIMARY FITTINGS INSIDE THE CONTAINMENT SUMPS. HAND TIGHTEN FIRMLY, & BOND TOGETHER.
TIGHTEN TO MANUFACTURER'S RECOMMENDATIONS.

D. INSPECT THE LENGTH OF PIPE BETWEEN CONTAINMENT SUMPS TO MAKE SURE IT IS POSITIONED CORRECTLY IN THE TRENCH. IF PIPING RUNS MUST BE CROSSED, REFER TO MANUFACTURER'S SPECIFICATIONS FOR PIPE CLEARANCES.

E. TEST BOOTS ARE INSTALLED INSIDE THE SUMP ON THE ENDS OF EACH PIPE SECTION. THE TEST BOOTS ALLOW AIR PRESSURE INTEGRITY TESTING OF THE SECONDARY PIPE BY ISOLATING THE INTERSTITIAL SPACE BETWEEN THE FRP DW JACKET AND THE PRIMARY PIPE. PORTS ON THE TEST BOOTS ARE USED TO CONNECT TEST JUMPER TUBES BETWEEN PIPE SECTIONS TO ALLOW THE ENTIRE INTERSTITIAL SPACE ON A PIPE RUN TO BE AIR TESTED SIMULTANEOUSLY.

F. TIGHTEN THE ENTRY FITTING BAND CLAMPS SECURELY AFTER THE INSTALLATION PROCESS HAS BEEN COMPLETED.

4.03.07 TEST PRIMARY PIPE LINES

A. PLAN AIR PRESSURE TESTING CAREFULLY, AND USE ALL DUE CAUTION. REGULATED AIR PRESSURE SOURCES MUST BE ABLE TO CHARGE LINES GRADUALLY UP TO TEST PRESSURES. ALWAYS USE CALIBRATED GAUGES WITH APPROPRIATE SCALE READINGS.
B. -ISOLATE THE TANKS BY CLOSING THE PUMP BALL VALVES OR REMOVING THE PRIMARY PIPE COUPLING FROM THE PUMP OUTLET AND CAPPING IT OFF.
C. -OPEN THE POPPET ON, AND PLUG EACH EMERGENCY SHEAR VALVE IN EACH LINE.
D. -CONNECT A PRESSURE GAUGE (0-100 PSIG) TO THE TEST PORT ON ONE OF THE EMERGENCY SHEAR VALVES IN EACH LINE.
E. -SLOWLY PRESSURIZE EACH LINE TO A MAXIMUM OF 60 PSIG. DO NOT EXCEED 75 PSIG.
F. -LEAVE TEST LINES PRESSURIZED FOR AT LEAST 1 HOUR TO DETECT LEAKS IN THE PRIMARY PIPING.

4.03.08 TEST THE INTERSTITIAL SPACE

A. -INSTALL THE APPROPRIATE TEST BOOTS (TB) IN THE PROPER POSITION TO ISOLATE THE INTERSTITIAL SPACE.
B. -THE FRP DW PIPE TEST BOOTS ARE CLAMPED TO THE COLLAR ON THE PRIMARY PIPE COUPLING AND THE OUTER JACKET OF THE FRP DW PIPE. PIPE TEST BOOTS ARE CLAMPED TO THE OUTSIDE OF THE PIPE WHERE IT ENTERS THE SUMP.
C. -INSTALL THE APPROPRIATE TEST JUMPER KITS BETWEEN EACH PIPING RUN INSIDE THE DISPENSER SUMPS.
D. -INSTALL TEST LINE TERMINATION KITS AT EACH ENDS OF EACH PIPING RUN IN THE TANK SUMP AND THE END DISPENSER SUMP.
E. -CAP ONE END OF EACH TEST LINE, AND CONNECT A TEST GAUGE/SHUT-OFF VALVE ASSEMBLY TO THE OTHER END.
F. -SLOWLY PRESSURIZE EACH SECONDARY LINE TO A MAXIMUM OF 5 PSIG AND CLOSE THE SHUT-OFF VALVE.
G. -LEAVE TEST LINES PRESSURIZED DURING REMAINING CONSTRUCTION AND BACKFILLING TO DETECT LEAKS IN THE CONTAINMENT PIPING.

4.03.09 BACKFILL

BACKFILL THE FLEXIBLE PIPING SYSTEM ONLY AFTER SYSTEM TESTING HAS BEEN COMPLETED. DO NOT DUMP BACKFILL DIRECTLY ONTO PIPES OR UP AGAINST SUMPS. BEGIN BY CAREFULLY HAND SHOVELING SELECT BACKFILL BETWEEN AND TO THE OUTSIDE OF THE PIPES TO MAINTAIN THE NECESSARY 4" MINIMUM SEPARATION BETWEEN THE PIPES AND 6" DISTANCE FROM THE WALLS OF THE TRENCH. CAREFULLY BACKFILL THE TRENCHES TO AVOID DISTURBING THE SPACING OR SLOPE OF THE PIPING.

4.03.10 COMPLETE THE FLEXIBLE INSTALLATION CHECKLIST AND REGISTER THE SITE

COMPLETE THE PIPE INSTALLATION CHECKLIST, AND MAIL OR FAX IT TO SMITH FIBERCAST ALONG WITH A COPY OF THE SITE LAYOUT PLAN.

5.01 GALVANIZED STEEL PIPING

ALL UNDERGROUND PIPING SHALL BE NON-CORROSIVE FRP OR FLEXIBLE PIPING WITH THE EXCEPTION OF THE VENT SWIVEL JOINT AND TANK RISERS.

ALL EXPOSED GALVANIZED PIPING SHALL BE MASTIC COATED AND PLASTIC WRAPPED TO PROTECT AGAINST CORROSION.

ALL GALVANIZED PIPING SHALL BE KEPT TO A MINIMUM, REQUIRED ONLY AS SPECIFIED ON THE PLANS.

ALL GALVANIZED PIPE THREADS SHALL BE CLEANED AND JOINTS ARE TO BE MADE USING ONLY UL APPROVED PIPE JOINT COMPOUND APPROPRIATE FOR USE WITH PETROLEUM PRODUCTS.

6.01 FLEXIBLE CONNECTORS

FLEXIBLE CONNECTORS ARE TO BE USED BETWEEN RISERS UNDER EACH DISPENSER AND FRP PIPE RUN AS REQUIRED.

7.01 PRODUCT, VENT/VAPOR PIPING - SLOPE OF LINES

A MINIMUM SLOPE OF 1/8" PER FOOT DOWN TOWARD THE TANKS IS REQUIRED IN ALL UNDERGROUND PRODUCT, VENT AND VAPOR PIPING. HOWEVER, THE MAXIMUM AVAILABLE SLOPE SHOULD BE USED WITHIN REQUIREMENTS FOR COVER AND PIPING AND DEPTH OF TANKS. PIPE COVER REQUIREMENTS ARE DETAILED IN THE DRAWINGS. PIPING WILL BE INSTALLED ON PRE-GRADED COMPACTED BED MATERIAL.
NO SUPPORT OR SPACING MATERIAL OTHER THAN THE BED AND BACKFILL SHALL BE LEFT IN CONTACT WITH THE PIPING. THIS METHOD OF INSTALLATION SHOULD PREVENT THE POSSIBILITY OF ANY SAGS OR HUMPS WHICH WOULD TRAP THE LINES.

GENERAL

1.01 RELATED WORK (SEE SITE DRAWINGS AND DETAILS)

1.02 QUALITY ASSURANCE

A. GOVERNING STANDARDS, AS APPLICABLE

1. ASTM STANDARD DOCUMENT NUMBER D4021-86.

2. UNDERWRITERS LABORATORIES, INC. (U.L.) STANDARD FOR SAFETY 1316, FILE MH 9061 FOR STORAGE OF FLAMMABLE LIQUIDS. A U.L. - CERTIFICATION PLATE SHALL BE ATTACHED TO EACH TANK.

3. NATIONAL FIRE PROTECTION ASSOCIATION (NFPA) STANDARDS.
NFPA 30: FLAMMABLE AND COMBUSTIBLE LIQUIDS CODE
NFPA 30A: AUTOMOTIVE AND MARINE SERVICE STATION CODE
NFPA 31: INSTALLATION OF OIL-BURNING EQUIPMENT

PRODUCTS:

2.01 DOUBLE WALL FIBERGLASS REINFORCED PLASTIC (FRP) UNDERGROUND STORAGE TANKS.

A. LOADING CONDITIONS - TANK SHALL MEET THE FOLLOWING DESIGN CRITERIA:

1. INTERNAL LOAD: TANK SHALL WITHSTAND A 5 PSI AIR PRESSURE TEST WITH 5:1 SAFETY FACTOR. CONTRACTOR SHALL INDIVIDUALLY TEST TANKS FOR LEAKAGE PRIOR TO INSTALLATION. MAXIMUM TEST PRESSURE IS 5 PSI.

2. VACUUM TEST: TO VERIFY STRUCTURAL INTEGRITY, EVERY TANK SHALL BE VACUUM TESTED BY THE MANUFACTURER AT THE FACTORY TO 11.5 INCHES OF MERCURY.

3. SURFACE LOADS: TANKS SHALL WITHSTAND SURFACE H-20 AXLE LOADS WHEN PROPERLY INSTALLED ACCORDING TO MANUFACTURER'S CURRENT INSTALLATION INSTRUCTIONS.

4. EXTERNAL HYDROSTATIC PRESSURE: TANK SHALL BE CAPABLE OF BEING BURIED IN GROUND WITH 1' OF OVERBURDEN OVER THE TOP OF THE TANKS, THE HOLE FULLY FLOODED AND A SAFETY FACTOR OF 5:1 AGAINST GENERAL BUCKLING.

5. TANKS SHALL SUPPORT ACCESSORY EQUIPMENT - SUCH AS HEATING COILS, DROP TUBES. SUBMERSIBLE PUMPS AND LADDERS - WHEN INSTALLED ACCORDING TO TANK MANUFACTURER'S RECOMMENDATIONS AND LIMITATIONS.

B. PRODUCT STORAGE

1. TANKS SHALL BE CAPABLE OF STORING PETROLEUM PRODUCTS WITH SPECIFIC GRAVITY UP TO 1.1.

2. TANKS SHALL BE VENTED TO ATMOSPHERIC PRESSURE. THE TANK IS NOT DESIGNED AS A PRESSURE VESSEL, EXCEPT FOR USE WITH VAPOR-RECOVERY SYSTEMS, PROVIDED THE PRESSURE OF VACUUM DOES NOT EXCEED 1 PSI.

3. GASOLINE; GASOHOL (90% GASOLINE/10% ETHANOL MIXTURE; 90.5% GASOLINE AND 9.5% OXINOL - 50%(4.75% METHANOL AND 4.75% GTBA MIXTURE); DUPONT EPA WAIVER (GASOLINE WITH 5 % METHANOL AND A MINIMUM OF 2.5% COSOLVENT - GASOLINE WITH UP TO 20% (BY VOLUME) OF MTBE; % ETHANOL OR GASOLINE/WATER/ETHANOL OR METHANOL-BLEND MOTOR FUELS, INCLUDING 100 METHANOL OR M85 (85% METHANOL) AT AMBIENT TEMPERATURES; KEROSENE; DIESEL FUEL; OR USED FOR FUEL OIL AT TEMPERATURES NOT TO EXCEED 150 DEGREES F.

C. MATERIALS

1. TANKS SHALL BE MANUFACTURED WITH 100% RESIN AND GLASS FIBER REINFORCEMENT. NO SAND FILLERS.

D. TANK DIMENSIONS

10,000 GALLON TANK: 1. TANK SHALL HAVE NOMINAL CAPACITY OF 10,000 GALLONS.
2. TANK SHALL HAVE NOMINAL OUTSIDE DIAMETER OF 8 FEET.
3. TANK SHALL HAVE APPROXIMATE OVERALL LENGTH OF 31'-6"

15,000 GALLON TANKS: 1. TANK SHALL HAVE NOMINAL CAPACITY OF 15,000 GALLONS.
2. TANK SHALL HAVE NOMINAL OUTSIDE DIAMETER OF 8 FEET.
3. TANK SHALL HAVE APPROXIMATE OVERALL LENGTH OF 29'-5"

E. INTERSTITIAL SPACE

1. TANK SHALL HAVE A SPACE BETWEEN THE PRIMARY AND SECONDARY SHELL WALLS TO ALLOW FOR THE FREE FLOW AND CONTAINMENT OF ALL LEAKED PRODUCT FROM THE PRIMARY TANK. THE SPACE ALSO ALLOWS THE INSERTION OF A MONITORING DEVICE THROUGH A MONITORING FITTING.

2.02 APPURTENANCES AND ACCESSORIES

A. ANCHOR STRAPS

1. STRAPS SHALL BE FRP ANCHOR STRAPS AS SUPPLIED BY TANK MANUFACTURER.

2. NUMBER AND LOCATION OF STRAPS SHALL BE SPECIFIED IN CURRENT LITERATURE BY TANK MANUFACTURER.

B. MANWAYS

1. ALL MANWAYS ARE TO BE FLANGED AND 22" I.D., COMPLETE WITH U.L. LISTED GASKETS, BOLTS AND COVERS. (30" AND 36" I.D. MANWAYS ARE ALSO ACCEPTABLE.)

2. LOCATION IS SHOWN ON TANK DRAWINGS.

3. OPTIONAL MANWAY EXTENSION TUBES SHALL BE FRP AND 24" LONG.

4. EACH STEEL MANWAY COVER SHALL HAVE A MINIMUM OF THREE 4" NPT FITTINGS. (SEE MANUFACTURER'S SPECIFICATIONS FOR ACTUAL SIZE AND QUANTITY OF FITTINGS.)

C. FILL TUBES

1. FILL TUBE RISERS SHALL BE 4"ø SCHEDULE 40 GALVANIZED STEEL PIPE SUPPLIED AND INSTALLED BY THE CONTRACTOR. FILL TUBES SHALL BE AS SPECIFIED ON DRAWINGS AND LOCATED AS SHOWN ON DRAWINGS.

D. GAUGE PLATES

GAUGE PLATES SHALL BE INSTALLED UNDER EACH SERVICE FITTING AND MANWAY OPENING.

E. HEATING COILS

1. OPTIONAL HEATING COILS SHALL BE INSTALLED IN A SEPARATE 22" MANWAY AND SHALL BE THE STANDARD ITEM SUPPLIED BY TANK MANUFACTURER.

F. OPTIONAL LADDERS

LADDERS SHALL BE THE STANDARD LADDER AS SUPPLIED BY TANK MANUFACTURER (ALUMINUM, CARBON STEEL OR FIBERGLASS).

G. NPT THREADED FITTINGS

1. ALL THREADED FITTINGS SHALL BE A MATERIAL OF CONSTRUCTION CONSISTENT WITH THE REQUIREMENTS OF THE U.L. LABEL.

2. ALL STANDARD THREADED FITTINGS SHALL BE HALF COUPLINGS AND SHALL BE 4" IN DIAMETER. REDUCERS ARE TO BE USED FOR SMALLER SIZES WHERE SHOWN AND PROVIDED BY CONTRACTOR.

3. SIZES

FILL - 4"	OUTLET - 4"
GAUGE - 4"	VENT - 4"
INLET - 4"	EXTRA - 4"

4. STRENGTH - NPT FITTINGS SHALL WITHSTAND A MINIMUM OF 150 FOOT-POUNDS OF TORQUE AND 1,000 FOOT-POUNDS OF BENDING BOTH WITH A 2:1 SAFETY FACTOR.

H. MONITOR FITTINGS
EACH MONITOR FITTING SHALL CONSIST OF A 4" NPT FITTING.
EXECUTION:
3.01 INSTALLATION
CONTRACTOR SHALL BE TRAINED BY THE TANK MANUFACTURER, THE STATE OR OTHER APPROVED AGENCY.

3.02 TESTING
TANKS SHALL BE INSTALLED AND TESTED ACCORDING TO CURRENT DOUBLE WALL INSTALLATION INSTRUCTIONS PROVIDED WITH THE TANK. (REFER TO CURRENT MANUFACTURER PUBLICATIONS AND INCLUDE AS PART OF SPECIFICATIONS.)

WARRANTY:

4.01 WARRANTY SHALL BE MANUFACTURER'S CURRENT STANDARD WARRANTY.

PUMP SPECIFICATION GENERAL:

THE ENTIRE PUMPING ASSEMBLY SHALL HAVE UL LISTING AND SHALL MEET ALL REQUIREMENTS OF UL STANDARD UL 79.

THE PUMP DISCHARGE HEAD AND MANIFOLD ASSEMBLY SHALL BE MANUFACTURED FROM ASTM A 48 CLASS 30 GRAY IRON.

THE PUMPS SHALL BE 2.0 HORSEPOWER FOR HIGH GRADE FUEL TANK(TWO PER TANK) AND 2.0 HORSEPOWER FOR UNLEADED GRADE TANK(TWO PER TANK) AND SHALL BE MANUFACTURED TO THE PROPER LENGTH AS DETERMINED BY THE TANK DIAMETER, TYPE OF TANK, AND BURY DEPTH.

AN OPTIONAL VARIABLE LENGTH TELESCOPIC FEATURE CAN BE PROVIDED SUCH THAT LENGTH OF THE PUMP CAN BE FIELD ADJUSTED AT THE JOB SITE TO FIT THE SPECIFIC PUMP LENGTH REQUIRED. THIS VARIABLE LENGTH OPTION SHALL BE AVAILABLE IN THREE VARIABLE LENGTH RANGES, REFERRED TO AS VL1, VL2 AND VL3, WHERE THE VL2 MODEL WILL FIT 94% OF ALL KNOWN INSTALLATIONS.

THE PUMP MOTOR SHALL HAVE A THERMAL OVERCURRENT OVERLOAD PROTECTOR WITH AUTOMATIC RESET.

THE PUMP MOTOR ASSEMBLY SHALL BE CLEARLY MARKED WITH PERTINENT INFORMATION INCLUDING MODEL, HORSEPOWER, VOLTAGE, PHASE, AND MANUFACTURER.

SINGLE PHASE PUMP MOTORS SHALL BE A PERMANENT SPLIT PHASE CAPACITOR, AND SHALL INCORPORATE A 15 MFD CAPACITOR.

THE PUMPS SHALL BE UL LISTED FOR AN MIXTURE OF ALCOHOL AND GASOLINE.

THE PUMPING UNIT SHALL NOT INCORPORATE ANY FLEXIBLE DIAPHRAGMS AND ALL SEALING SHALL BE ACCOMPLISHED WITH O-RINGS OR UL RECOGNIZED GASKETS.

THE PUMPS SHALL HAVE A REMOVABLE INTAKE SCREEN WITH OPENINGS NO GREATER THAN 3/32 INCH.

THE PUMPS SHALL BE MANUFACTURED BY FC PETRO, INC., MCFARLAND, WI.

INSTALLATION AND MAINTENANCE

THE PUMP SHALL HAVE A TWO OR THREE WIRE FIELD CONNECTION DEPENDING ON SINGLE OR THREE PHASE MODELS AND AN EASY ACCESS GROUND WIRE TERMINAL, AND SHALL INCORPORATE A WIRE SEAL PLUG WHICH WILL ACCOMMODATE THESE WIRES.

THE PUMP SHALL INCORPORATE A PORT FOR LINE PRESSURE TESTING THAT SHALL BE SEALED WITH A 1/4" NPT PIPE PLUG.

THE PUMP HEAD SHALL BE EQUIPPED WITH A MANUAL PRESSURE RELIEF SCREW TO MANUALLY DROP LINE PRESSURE TO ZERO BY VENTING LINE PRESSURE INTO STORAGE TANK. PURPOSE OF THIS FUNCTION IS TO AVOID FUEL SPRAYING INTO DISPENSER AND PUMP CONTAINMENT SUMPS DURING ANY ROUTINE SERVICE REQUIRING PIPING TO BE OPENED TO ATMOSPHERE SUCH AS FILTER REPLACEMENT OR LEAK DETECTOR MAINTENANCE.

THE PUMP UNIT SHALL HAVE A FULLY EXTRACTABLE HEAD IN ORDER TO PERMIT REMOVAL OF THE PUMP MOTOR ASSEMBLY WITHOUT DISTURBING THE DISCHARGE PIPING OF THE ELECTRICAL WIRING.

THE PRODUCT IN THE PIPELINES SHALL BE HELD IN PLACE BY A LINE CHECK VALVE THAT SHALL HAVE A MINIMUM SEALING OF 170 LBS WHEN THE PUMP IS NOT RUNNING.

THE LINE CHECK VALVE SHALL BE INDEPENDENT OF THE REMOVABLE HEAD AND SHALL BE EASILY ACCESSIBLE.

THE REMOVAL OF THE EXTRACTABLE PORTION OF THE PUMP SHALL NOT DISTURB PRODUCT IN THE PIPELINES DOWNSTREAM OF THE CHECK VALVE.

DURING THE REMOVAL OF THE EXTRACTABLE PORTION OF THE PUMP, PRODUCT CONTAINED IN THE DISCHARGE MANIFOLD OF THE PUMP SHALL DRAIN AUTOMATICALLY INTO THE STORAGE TANK.

THE PUMP MOTOR SHALL BE INTERCHANGEABLE BY HORSEPOWER WITH DIFFERENT MANUFACTURER'S PRODUCTS.

OPERATION

THE PUMP SHALL HAVE AN AIR/VAPOR ELIMINATION SYSTEM THAT RETURNS AIR OR VAPORS TO THE UNDERGROUND STORAGE TANK THROUGH A TUBE DISCHARGING NEAR THE TOP OF THE PUMP ASSEMBLY.

THE PUMP UNIT SHALL CONTAIN A BUILT-IN EXPANSION RELIEF VALVE THAT RELIEVES PRESSURE AT OR ABOVE PUMPING PRESSURE BUT BELOW 50 PSI AS STANDARD. OTHER PRESSURE RELIEF SETTINGS AS REQUIRED BY CERTAIN ELECTRONIC LINE LEAK DETECTION SHALL BE AVAILABLE.

THE PUMP MOTOR SHALL UTILIZE THE PRODUCT BEING PUMPED FOR LUBRICATION OF THE MOTOR BEARINGS AND FOR COOLING. THE STATOR AND THIS FLUID SHALL DISCHARGE INTO THE UNDERGROUND STORAGE TANK AT THE TOP OF THE MOTOR.

THE PUMP SHALL HAVE SIPHON CAPABILITY BUILT INTO THE PUMP AS STANDARD.

002 START-UP AND CALIBRATION NOTES

1 MOTOR FUEL DISPENSING PUMPS

1.1 SCOPE: THE MOTOR FUEL DISPENSING PUMPS WILL BE INSTALLED BY THE CONTRACTOR IN ACCORDANCE WITH THE MANUFACTURER'S INSTALLATION DOCUMENTS, THE SCOPE OF WORK, AND THE CONSTRUCTION DRAWINGS AND CONSTRUCTION SPECIFICATIONS.

1.2 REMOTE DISPENSING ISLAND: WHERE INDICATED IN THE SCOPE OF WORK, REMOTE MOTOR FUEL DISPENSING ISLANDS SHALL BE INSTALLED IN ACCORDANCE WITH THE MANUFACTURER'S INSTALLATION DOCUMENTS AND THE CONSTRUCTION DRAWINGS AND SPECIFICATIONS.

1.3 FILTERS: CONTRACTOR SHALL FURNISH AND INSTALL FILTERS FOR EACH GASOLINE AND DIESEL DISPENSER/PUMP. ACTIVATE EACH PRODUCT FOR EACH DISPENSER AND INSPECT FILTER FOR L