TYPICAL FIRE RATED PENETRATION DETAILS

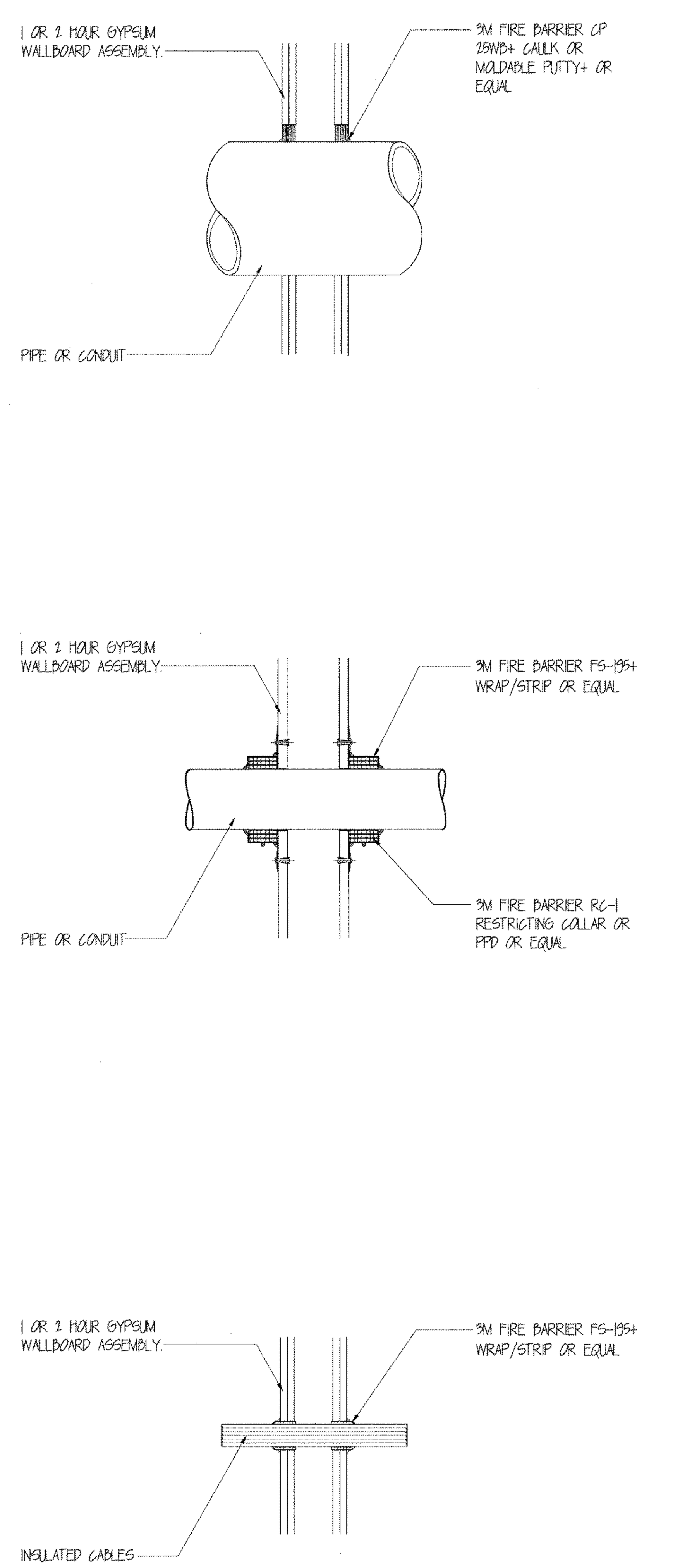

TYPICAL FIRE RATED CAPTURE TRACK

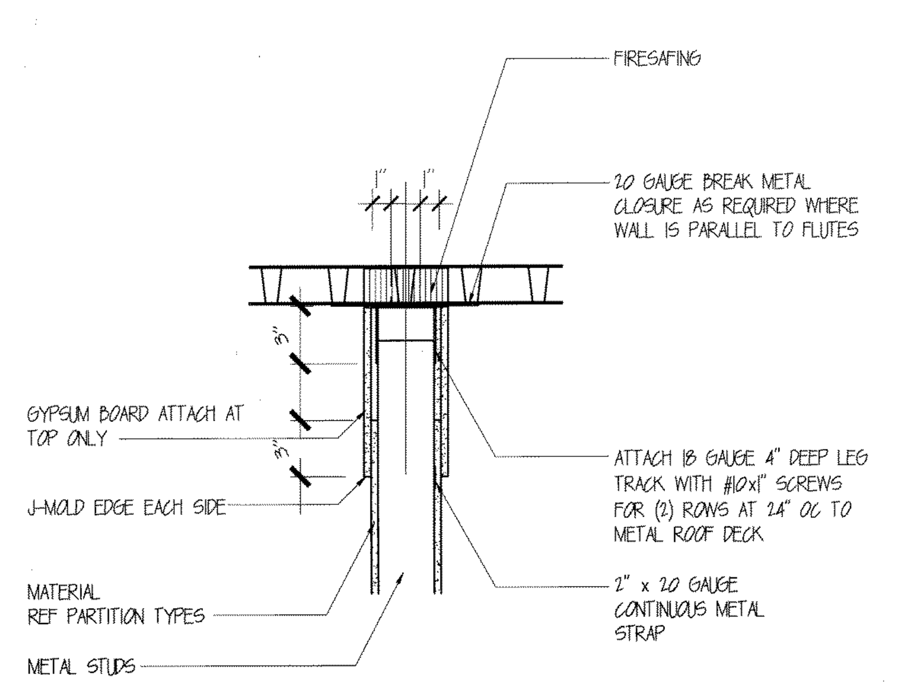

SYMBOLS LEGEND

- FINISH FLOOR ELEV. 100'-0" — BULLET ELEVATION
- PROPERTY LINE
- (XXX) DOOR INDICATOR
- [XX] WALL INDICATOR
- ⟨A⟩ WINDOW TYPE
- ⟨A⟩ SIGNAGE INDICATOR
- △1 REVISION TAG
- (XXXX) KEY NOTE
- 101 ROOM NUMBER / SALES ROOM NAME
- 100'-0" PLAN ELEVATION INDICATOR
- X-XX SHEET ELEVATION SHOWN
- ELEVATION REFERENCE
- DIRECTION TAKEN / X-XX SHEET NUMBER / SECTION NUMBER
- BUILDING & WALL SECTION
- DRAWING NUMBER / DETAIL NAME / # DRAWING TITLE / SCALE: NOT TO SCALE / DRAWING SCALE
- DRAWING TITLE
- 5 / A2 DETAIL NUMBER / SHEET REFERENCED / ENLARGED AREA
- ENLARGED DETAIL INDICATOR
- 2x2 CEILING DIFFUSER
- 2x2 RETURN AIR GRILL
- FIRE SPRINKLER HEAD
- SIDE WALL SPRINKLER HEAD
- FIRE SPRINKLER HEAD (PREACTION SYSTEM)
- (SD) SMOKE DETECTOR
- EXIT SIGN
- EQUIPMENT MARK
- (FE) CLASS A FIRE EXTINGUISHER (SURFACE MOUNTED)
- CLASS A FIRE EXTINGUISHER W/ RECESSED CABINET
- (X) STRUCTURAL GRIDLINE
- ⟨XXX⟩ EQUIPMENT INDICATOR
- (XX) COLOR INDICATOR

MATERIALS LEGEND

FOR PLANS AND DETAILS

- CONCRETE BLOCK WALL
- 42" HIGH WALL
- FRAME PARTITION (WOOD FRAME)
- ROUND STEEL COLUMN
- SQUARE STEEL COLUMN
- WIDE FLANGE STEEL COLUMN
- SQUARE CONCRETE COLUMN

FOR DETAILS

- PLASTER
- GYPSUM BOARD
- PLYWOOD
- CHALKBOARD OR TACKBOARD
- RIGID INSULATION BOARD
- INSULATED PANEL
- WOOD FRAMING (CONTINUOUS MEMBER)
- WOOD BLOCKING (DISCONTINUOUS MEMBER)
- FINISH WOOD
- MISCELLANEOUS METAL
- ALUMINUM
- BATT INSULATION
- STRUCTURAL NEOPRENE GASKET
- GYPSUM LATH
- ACOUSTICAL TILE
- EARTH FILL

NOTE: ABOVE MATERIAL INDICATIONS ARE STANDARD AND ARE NOT INTENDED AS A LISTING OF MATERIALS ON THE JOB.

ABBREVIATIONS

A.F.F.	ABOVE FINISH FLOOR
ADJ	ADJUSTABLE
ALUM	ALUMINUM
APPROX/APP	APPROXIMATELY
BRG	BEARING
B.M.	BENCH MARK
BTM	BOTTOM
BLDG	BUILDING
℄	CENTERLINE
CLG	CEILING
CMU	CONCRETE MASONRY UNIT
C.J.	CONTROL JOINT
COL	COLUMN
CONC	CONCRETE
CONT	CONTINUOUS
DIA	DIAMETER
DIM	DIMENSION
D.F.	DRINKING FOUNTAIN
DN	DOWN
DTL	DETAIL
ELEC	ELECTRICAL
E.W.C.	ELECTRIC WATER COOLER
ELEV	ELEVATION
EQ	EQUAL
EXIST	EXISTING
E.J./EXP. JT.	EXPANSION JOINT
EXT	EXTERIOR
F.H.	FIRE HYDRANT
F.E.	FIRE EXTINGUISHER
F.E.C.	FIRE EXTINGUISHER CABINET
F.H.C.	FIRE HOSE CABINET
F.F./FIN.FLR.	FINISH FLOOR
FL	FLOW LINE
GFRG	FIBERGLASS REINFORCED GYPSUM
G.I.	GALVANIZED IRON
GL	GRID LINE
GA	GAUGE
GYP. BD.	GYPSUM BOARD
HD	HEAD
HDCP/H.C.	HANDICAPPED
HDWR	HARDWARE
HT	HEIGHT
HM	HOLLOW METAL
HORIZ	HORIZONTAL
INSUL	INSULATION
INT	INTERIOR
JST BRG	JOIST BEARING
JT	JOINT
LAM	LAMINATE
LAV	LAVATORY
MFR	MANUFACTURER
M.O.	MASONRY OPENING
MAT'L	MATERIAL
MAX	MAXIMUM
MECH	MECHANICAL
MIN	MINIMUM
MISC	MISCELLANEOUS
N.I.C.	NOT IN CONTRACT
N.T.S.	NOT TO SCALE
NO.	NUMBER
O.C.	ON CENTER
OPNG	OPENING
OPP	OPPOSITE
OS	OVERFLOW SCUPPER
PL	PLATE
PLAM	PLASTIC LAMINATE
PLYWD/PWD	PLYWOOD
REF/RE.	REFER
REINF	REINFORCING
REQ'D	REQUIRED
RM	ROOM
R	RADIUS OR RISER
SIM	SIMILAR
S.C.	SOLID CORE
SJ	SCORED JOINT
SPECS	SPECIFICATIONS
SQ	SQUARE
STL	STEEL
STL JST	STEEL JOIST
STRUCT	STRUCTURAL
T.O.C.	TOP OF CURB
T.O.M.	TOP OF MASONRY
T.O.S.	TOP OF STEEL
T.O.W.	TOP OF WALL
T	TREAD
TYP	TYPICAL
VERT	VERTICAL
VCT	VINYL COMPOSITION TILE
WC	WATER CLOSET
WD	WOOD
W/	WITH

NOTE: ABOVE ABBREVIATIONS ARE STANDARD AND ARE NOT INTENDED AS A LISTING OF ABBREVIATIONS ON THE JOB.

HANDICAP ACCESSIBILITY

1. GENERAL ACCESSIBILITY
   - A. THRESHOLDS SHALL BE NO HIGHER THAN 1/2" ABOVE THE FLOOR EDGE TO BE REVEALED WITH A SLOPE NO GREATER THAN 1:2 IF MORE THAN 1/4"
   - B. MAXIMUM SLOPE OF ALL HANDICAP ACCESS RAMPS SHALL BE 1:12.
   - C. WIDTH OF CLEAR AREA IN THE SWING SIDE OF THE DOOR SHALL EXTEND 24" PAST THE STRIKE JAMB FOR EXTERIOR DOORS AND 18" PAST STRIKE JAMB FOR INTERIOR DOORS AT WHEELCHAIR ACCESSIBLE AREAS.
   - D. EXTERIOR LEVEL LANDING MAY SLOPE UP TO 1/4" IN ANY DIRECTION TO ALLOW SURFACE DRAINAGE.
   - E. THE SPACE BETWEEN TWO CONSECUTIVE DOORS SHALL PROVIDE A MINIMUM OF 48" CLEAR DEPTH BETWEEN THE OPEN DOOR AND A SECOND CLOSED DOOR, DOORS IN SERIES AT A VESTIBULE SHALL SWING IN THE SAME DIRECTION OR AWAY FROM THE SPACE BETWEEN THEM.
   - F. CENTER OF ELECTRICAL SWITCHES SHALL BE LOCATED NOT LESS THAN 36" NOR MORE THAN 48" ABOVE THE FLOOR UNLESS OTHERWISE NOTED.
2. RESTROOM ACCESSIBILITY
   - A. PROVIDE 30" X 48" CLEAR FLOOR SPACE FOR FORWARD APPROACH LAVATORIES AND DRINKING FOUNTAINS. THIS CLEAR SPACE MAY INCLUDE THE KNEE AND TOE SPACE.
   - B. HOT WATER AND DRAIN PIPES UNDER HANDICAP ACCESSIBLE LAVATORIES SHALL BE INSULATED.
   - C. MIRROR BOTTOM EDGE SHALL BE LOCATED 40" MAXIMUM ABOVE THE FLOOR.
   - D. FAUCET CONTROLS AND OPERATING MECHANISM (OPERABLE WITH ONE HAND) SHALL BE OF THE TYPE NOT REQUIRED TIGHT GRASPING, PINCHING OR TWISTING OF THE WRIST, AND AN OPERATING FORCE NOT EXCEEDING 5 POUNDS
   - E. SELF-CLOSING VALVES SHALL REMAIN OPEN FOR AT LEAST 10 SECONDS.
   - F. TOILET TISSUE DISPENSERS SHALL BE MOUNTED WITHIN 12" FROM THE FRONT EDGE OF THE TOILET SEAT.
   - G. OPERATING PARTS OF DISPENSING AND DISPOSAL FIXTURES SHALL BE WITHIN 40" OF THE FLOOR.
   - H. HEIGHT OF WATER CLOSET SEAT SHALL BE 17" TO 19" ABOVE FLOOR. CONTROLS SHALL BE NO HIGHER THAN 44" ABOVE THE FINISHED FLOOR.

ARCHITECTURAL GENERAL NOTES

1. DO NOT SCALE DRAWINGS, CONTRACTOR SHALL VERIFY EXISTING CONDITIONS AT THE SITE AND REPORT AND DISCREPANCIES TO THE ARCHITECT FOR CLARIFICATION BEFORE PROCEEDING WITH THE WORK.
2. CONTRACTOR SHALL COORDINATE THE INSTALLATION OF THE VARIOUS TRADE ITEMS WITHIN THE SPACE AND ABOVE THE CEILING (INCLUDING BUT NOT LIMITED TO: STRUCTURAL MEMBERS, CONDUITS, RACEWAYS, LIGHT FIXTURES, CEILING SYSTEMS AND ANY SPECIAL STRUCTURAL SUPPORTS REQUIRED) AND SHALL BE RESPONSIBLE FOR MAINTAINING THE FINISH CEILING HEIGHT ABOVE THE FINISHED FLOOR INDICATED IN THE DRAWINGS.
3. DIMENSIONS SHOWN ON FLOOR PLANS, SECTIONS, ELEVATIONS, AND DETAILS ARE TO THE FACE OF GYPSUM WALL BOARD, GRID LINES AND CENTERLINES UNLESS NOTED OTHERWISE.
4. IN THE CASE OF A CONFLICT BETWEEN THE DRAWINGS AND THE SPECIFICATIONS, THE MOST STRINGENT REQUIREMENT SHALL TAKE PRECEDENCE AND CONTRACTOR SHALL NOTIFY THE ARCHITECT OF ANY SUCH CONFLICT BEFORE PROCEEDING WITH THE WORK.
5. ANY SPECIFICATIONS AND CONSULTANT DRAWINGS ARE SUPPLEMENTAL TO THE ARCHITECTURAL DRAWINGS. IT SHALL BE THE GENERAL CONTRACTORS RESPONSIBILITY TO COORDINATE WITH THE ARCHITECTURAL DRAWINGS BEFORE THE INSTALLATION OF ANY OF THE CONSULTANTS WORK AND TO BRING ANY DISCREPANCIES OR CONFLICTS TO THE ARCHITECTS ATTENTION FOR CLARIFICATION. IMPROPERLY INSTALLED WORK SHALL BE CORRECTED BY THE GENERAL CONTRACTOR AND AT THE GENERAL CONTRACTORS EXPENSE. NO EXPENSE TO THE ARCHITECT OR OTHER DESIGN PROFESSIONALS WILL BE ALLOWED.
6. FINISH FLOOR ELEVATIONS SHOWN INDICATE THE TOP OF CONCRETE SLABS WHERE EXPOSED.
7. ACCESS PANELS, WHERE REQUIRED BY BUILDING CODE OR FOR PROPER OPERATION OR MAINTENANCE OF MECHANICAL OR ELECTRICAL EQUIPMENT, SHALL BE PROVIDED AND INSTALLED AS SHOWN ON THE REFLECTED CEILING PLANS. CONTRACTOR SHALL COORDINATE SIZE, LOCATION AND TYPE OF ACCESS PANEL WITH OTHER TRADES WORK AND RECEIVE APPROVAL FROM THE ARCHITECT.
8. GROUT SOLID ALL CELLS OF CONCRETE BLOCK WALLS RECEIVING MOUNTED ELECTRICAL PANELS, ANCHORAGE OF SUCH ITEMS AS LADDERS, HANDRAILS, EQUIPMENT STANDARDS OR ANCHORAGES, ETC.
9. 3/4" FIRE TREATED PLYWOOD BACKING 8'-0" HIGH SHALL BE PROVIDED AND INSTALLED AT TELEPHONE AND ELECTRICAL ROOMS AS REQUIRED. SEE ELECTRICAL PLANS FOR EQUIPMENT LOCATIONS.
10. SIZES OF HOUSEKEEPING PADS AND BASES FOR MECHANICAL EQUIPMENT ARE APPROXIMATE. GENERAL CONTRACTOR SHALL VERIFY EXACT SIZE AND LOCATION OF ALL CONCRETE PADS AND BASES WITH EQUIPMENT MANUFACTURERS BEFORE INSTALLATION.
11. ALL AREAS OF THE SITE, EXTERIOR AND INTERIOR WHICH ARE NOT IN THE SCOPE OF THE PROJECT AND ARE DISTURBED BY CONSTRUCTION SHALL BE RETURNED TO ORIGINAL CONDITION.
12. ALL ITEMS WITHIN THESE PROJECT DOCUMENTS ARE PART OF THE BASE BID UNLESS OTHERWISE NOTED.
13. THE ARCHITECTURAL DRAWINGS ESTABLISH AND COORDINATE THE FINISHED APPEARANCE AND EXACT LOCATION OF ALL EXPOSED ELEMENTS OF THE WORK, INCLUDING THAT WORK WHICH IS ILLUSTRATED PRIMARILY ON DRAWINGS OF OTHER DISCIPLINES. LOCATIONS SHOWN ON OTHER DRAWINGS MAY BE SCHEMATIC, UNLESS OTHERWISE NOTED ON THE ARCHITECTURAL DRAWINGS. THE ARCHITECTURAL DRAWINGS TAKE PRECEDENCE FOR THE FINISHED APPEARANCE AND LOCATIONS OF ALL PARTS OF THE WORK.
14. THE ARCHITECTURAL FLOOR PLANS, REFLECTED CEILING PLAN, SECTIONS AND ELEVATIONS SHOW THE EXACT LOCATION OF MANY, BUT NOT ALL, EXPOSED PARTS OF THE WORK. FOR ITEMS NOT LOCATED EXACTLY, APPLY THE RULES INDICATED ON SHEET G003 'TYPICAL RULES FOR DETERMINING MOUNTING HEIGHTS AND LOCATIONS' TO DETERMINE THE EXACT LOCATION OF EACH EXPOSED PART OF THE WORK.
15. FOR ILLUSTRATION AND DEFINITION OF TYPICAL SYMBOLS USED ON THE ARCHITECTURAL DRAWINGS, SEE SHEET G001-'SYMBOLS LEGEND'.
16. CONTRACTOR SHALL VERIFY ALL GRID LINE COORDINATES AND CHECK THEM AGAINST DIMENSIONS SHOWN ON PLANS AND DETAILS. THE ARCHITECT SHOULD BE NOTIFIED OF ANY DISCREPANCIES.
17. GENERAL CONTRACTOR WILL COORDINATE ALL WORK WITH MALL MANAGEMENT AND PERFORM WORK TO MEET ALL REQUIREMENTS OF THE MALL LEASE AGREEMENT. CONTRACTORS WORK IS SUBJECT TO INSPECTION BY THE MALL PERSONNEL FOR COMPLIANCE WITH THE TERMS OF THE LEASE AGREEMENT.
18. THE GENERAL CONTRACTOR SHALL VERIFY ALL CONDITIONS AT THE JOB SITE AND NOTIFY THE ARCHITECT OR OWNER'S REPRESENTATIVE OF ANY OMISSIONS, DIMENSIONAL ERRORS, OR DISCREPANCIES PRIOR TO BEGINNING OR FABRICATING ANY WORK, OTHERWISE, THE CORRECTIONS, (AND ASSOCIATED COST OF SUCH ITEMS), WILL BE RESPONSIBILITY OF THE GENERAL CONTRACTOR.
19. ITEM NOTED "BY OWNER" IN THESE CONTRACT DOCUMENTS SHALL BE PROVIDED BY THE OWNER AND INSTALLED BY THE GENERAL CONTRACTOR OR HIS FORCES. THE GENERAL CONTRACTOR SHALL BE RESPONSIBLE FOR PROVIDING ALL ACCESSORY MATERIALS REQUIRED TO INSTALL SUCH ITEMS, AND MAKE FINAL CONNECTIONS.
20. ALL LIGHT FIXTURES TO BE LOCATED PER THE LIGHTING PLAN CONTAINED IN THE ARCHITECTURAL DOCUMENTS.
21. SLOPE SLAB CONTINUOUSLY DOWN TO DRAINS AT DESIGNATED AREAS. SAWCUT SLAB AS REQUIRED FOR DRAINS, TRENCHES, CONDUIT, ETC.
22. LAY-OUT AND LOCATION SHOWN WITHIN THE "A" SERIES, ARCHITECTURAL, FOR ALL FEATURES AND DEVICES SHALL GOVERN ALL OTHER CONTRACT DOCUMENT SECTIONS UNLESS NOTED OTHERWISE.
23. PROVIDE WOOD BLOCKING FOR ALL WALL MOUNTED PLUMBING FIXTURES, TOILET ACCESSORIES, CABINETS, AND TABLES.
24. ALL ROOF PENETRATIONS ARE TO BE CUT, FLASHED AND SEALED BY THE MALL ROOFING SYSTEM INSTALLER IN ORDER TO MAINTAIN THE ROOF SYSTEM INTEGRITY AND WARRANTY.
25. PROVIDE WATER RESISTANT GYPSUM BOARD AT ALL TILE LOCATIONS, PLASTIC PANEL LOCATIONS, AND MECHANICAL ROOM WALLS.
26. |ALL LANDSCAPE MATERIALS DISPLACED OR DISTURBED AS A RESULT OF CONSTRUCTION SHALL BE REPLACED OR REPAIRED TO ORIGINAL CONDITION.
27. ALL JOINTS BETWEEN FRP AND THE TILE BASE OR CEILING GRID ARE TO BE SEALED.
28. ALL CONCEALED WOOD - BLOCKING, BACKING, FRAMING - SHALL BE FIRE RETARDANT TREATED LUMBER.
29. THE GENERAL CONTRACTOR SHALL PROVIDE THE FOLLOWING REPORTS AND GUARANTEES TO THE ARCHITECT OR OWNER'S REPRESENTATIVE.
    - A. CITY ELECTRICAL INSPECTOR'S CERTIFICATE OF COMPLIANCE WITH CITY REQUIREMENTS
    - B. CITY PLUMBING INSPECTOR'S CERTIFICATE OF COMPLIANCE WITH CITY REQUIREMENTS
    - C. CITY FIRE MARSHALL'S CERTIFICATE OF COMPLIANCE WITH CITY REQUIREMENTS.
    - D. CITY BUILDING INSPECTOR'S CERTIFICATE OF COMPLIANCE WITH CITY REQUIREMENTS.
    - E. STATE DIVISION OF HEALTH CERTIFICATE OF COMPLIANCE WITH CITY REQUIREMENTS.
    - F. CITY CERTIFICATE OF OCCUPANCY.

OWNER FURNISHED ITEMS

PIZZA OVEN MATERIALS AND CONSTRUCTION PROVIDED BY OWNER. GENERAL CONTRACTOR TO PROVIDE CONCRETE FOOTING WITH REBAR STUBBED OUT OF FOOTING, FLUE PIPE, CAP AND ADAPTER, AND ENTIRE HOOD SYSTEM.

TRIM AND MILLWORK SUPPLIED AND INSTALLED BY OWNER
EXCLUDING: ALL COUNTER AND BAR TOPS, DOORS AND HARDWARE, FOOT RAIL, MIRRORS, GLASS SNEEZE GUARDS AND STAINLESS STEEL TRIM AND PANELS.

POS SYSTEM, COMPUTER, CREDIT CARD MACHINES INCLUDING ALL RELATED CATV CABLING AND TERMINATIONS (SUPPLIED BY OWNER AND INSTALLED BY OWNERS VENDOR)
EXCLUDING: OUTLET BOXES AND 3/4" CONDUIT TO 12" ABOVE CEILING (SUPPLIED AND INSTALLED BY GENERAL CONTRACTOR)

TELEPHONE SYSTEM (SUPPLIED BY OWNER & INSTALLED BY OWNERS CONTRACTOR)
EXCLUDING: OUTLET BOXES AND 3/4" CONDUIT IN WALL TO 12" ABOVE CEILING (SUPPLIED AND INSTALLED BY GENERAL CONTRACTOR

DECOR PACKAGE (SUPPLIED & INSTALLED BY DECOR CONTRACTOR)

T.V. AND SOUND SYSTEM - SUPPLIED AND INSTALLED BY GLOBAL ENTERTAINMENT GROUP. CONTACT TRACI CASALE, PHONE 480-206-4444. EXCLUDING: CEILING MOUNTED T.V. ELECTRICAL OUTLETS (SUPPLIED & INSTALLED BY GENERAL CONTRACTOR)

SECURITY ALARM AND CCTV SYSTEM FROM PROTECTION ONE. INC.
CONTACT: NEAL SCHWARTZ (602)202-4144. (INSTALLATION OF ALARM SYSTEM TO BE COORDINATED BY THE CONTRACTOR).

WATER REVERSE OSMOSIS AND WATER SOFTNER SYSTEMS BY CULLIGAN. PLUMBER TO INSTALL MANIFOLD PER 9/P4.

EXTERIOR SIGNAGE (PROVIDED AND INSTALLED BY OWNERS VENDOR)
EXCLUDING: LIGHTING CONTACTOR AND FINAL CONNECTION BY GENERAL CONTRACTOR, COORDINATE LOCATION OF ELECTRICAL FOR SIGNS WITH OWNER AND OWNERS VENDOR. ALL INTERIOR SIGNAGE

DISH MACHINE AND BAR DISH MACHINE PROVIDED AND INSTALLED BY OWNERS VENDOR.
EXCLUDING: FINAL CONNECTIONS BY GENERAL CONTRACTOR.
CONTACT: ECOLAB JASON NICHOLS (312) 735-5222.

SODA RACK, SODA LINES, DISPENSERS AND CARBONATION PUMP PROVIDED AND INSTALLED BY OWNERS VENDOR. GENERAL CONTRACTOR TO INSTALL POWER, WATER AND SODA LINE CONDUITS.

BEER SYSTEM, BEER TOWER AND BEER LINES PROVIDED AND INSTALLED BY OWNERS VENDOR. GENERAL CONTRACTOR TO INSTALL POWER AND BEER LINE CONDUITS.

OWNER FURNISHED CONTRACTOR INSTALLED

FOOD SERVING EQUIPMENT, HOODS, HOOD EXHAUST FANS, HOOD MAKE UP AIR UNITS, ANSUL SYSTEMS KITCHEN & BAR EQUIPMENT, EVAPORATOR AND CONDENSER ON COOLER, (INSTALLED BY GENERAL CONTRACTOR)
VENDOR CONTACT: STANDARD RESTAURANT EQUIPMENT, JUSTIN MCCALLISTER 1-602-451-3694

COORDINATE ALL KITCHEN EQUIPMENT INSTALLATION WITH GRIMALDI'S OWNERS REP. CONTACT: DALE GARRETT (405)664-3147

TABLES, BOOTHS, AND SEATING, (SUPPLIED BY OWNER, INSTALLED BY GENERAL CONTRACTOR)

ALL LIGHT FIXTURES PROVIDED BY OWNER, INSTALLED BY CONTRACTOR

ESPRESSO MACHINE, COFFEE BREWER AND TEA BREWER: NATIONWIDE GOURMETS OF ARIZONA, BILL GATEWOOD, PHONE # 602-233-0851, EMAIL: CGATEWOOD@QWEST.COM

RECOVERED RUSTIC CORRUGATED METAL TIN CEILING TILES PROVIDED BY OWNER, INSTALLED BY CONTRACTOR

METAL BAR RACKS AT BAR SOFFIT PROVIDED BY OWNER AND INSTALLED BY GENERAL CONTRACTOR.
CONTRACTOR TO PROVIDE FIELD DIMENSIONS OF SOFFIT FOR CONSTRUCTION OF RACKS
EXCLUDING: ALL THREAD AND UNISTRUT REQUIRED TO HANG RACKS.
CONTACT: DOUG LEDET (405) 760-8595

REST ROOM ACCESSORIES CALLED FOR ON A401 AS WELL AS SOAP AND TOWEL DISPENSERS AT ALL SINKS ARE PROVIDED BY OWNER AND INSTALLED BY CONTRACTOR.
EXCLUDING: MIRRORS, GRAB BARS, AND ALL PARTITIONS PROVIDED AND INSTALLED BY GENERAL CONTRACTOR, UNLESS EXISTING MATERIALS TO BE REUSED.

CONTRACTOR FURNISHED ITEMS

TYPE "K" & TYPE "ABC" FIRE EXTINGUISHER TO BE PROVIDED AND INSTALLED BY CONTRACTOR PER DIRECTION OF FIRE MARSHALL

CONTRACTOR IS TO PROVIDE AND INSTALL ALL INTERIOR SIGNAGE AS SHOWN ON A105

ALL VENDORS LISTED BELOW ARE AVAILABLE FOR USE. OTHER VENDORS WITH PRODUCTS OF EQUAL QUALITY AND CHARACTERISTICS MAY BE UTILIZED. SUBMITTAL AND APPROVAL IS REQUIRED FOR SUBSTITUTION OF PRODUCTS.

CLOPAY BUILDING PRODUCTS. ROLL UP COUNTER DOORS
CONTACT: (800) 516-4301 www.clopaycommercial.com

LANDLORD REQUIRED CONTRACTORS

GENERAL CONTRACT IS RESPONSIBLE TO CONTACT THE LANDLORD FOR A LIST OF REQUIRED CONTRACTORS THAT ARE TO PROVIDE WARRANTY WORK ON THE EXISTING BUILDING FOR, BUT NOT LIMITED TO THE WORK DESCRIBED THE BELOW.

ALL LANDLORD REQUIRED CONTRACTOR WORK TO BE COMPLETED AT FAIR MARKET RATES DETERMINED BY COMPETITIVE BID. IF RATES ARE NOT AT MARKET RATE NOTIFY OWNER AND PROVIDE COMPETITIVE BID.

CONTRACTOR IS TO COMPLETE ALL ROOF INSTALLATIONS AND REPAIR WORK IN COMPLIANCE WITH THE WARRANTY ON THE EXISTING SYSTEM.

CONTRACTOR IS TO COMPLETE ALL FIRE SPRINKLER WORK IN COMPLIANCE WITH THE WARRANTY ON THE EXISTING MALL FIRE SPRINKLER SYSTEM.

CONTRACTOR IS TO COMPLETE ALL FIRE ALARM WORK IN COMPLIANCE WITH THE WARRANTY ON THE EXISTING MALL FIRE ALARM SYSTEM.

CONTRACTOR IS TO COMPLETE ALL SECURITY CARD ACCESS WORK IN COMPLIANCE WITH THE WARRANTY ON THE EXISTING MALL ACCESS SYSTEM.

CONTRACTOR IS TO COMPLETE ALL HVAC CONTROLS WORK IN COMPLIANCE WITH THE WARRANTY ON THE EXISTING MALL HVAC CONTROLS SYSTEM.

CONTRACTOR IS TO COMPLETE ELECTRIC WIRE LANDING TO WORK IN COMPLIANCE WITH THE WARRANTY ON THE EXISTING MALL ELECTRICAL SYSTEMS.

STATE OF FLORIDA — AARON MARSHALL KING — AR95537 — REGISTERED ARCHITECT — 12.28.10

Architect sealing the document:
Aaron Marshall King

GRIMALDI'S COAL BRICK-OVEN PIZZERIA
4000 N Scottsdale Road, Suite 203
Scottsdale, Arizona 85252
Phone: 405.664.3147 Fax: 405.562.1282

Aaron M. King
Architect
1221 N. Main Avenue
Springfield, MO 65802
Phone: (417) 864-0916
aking.integrity-d@earthlink.net

DOCUMENTS FOR:
DOWNTOWN at the GARDENS
GRIMALDI'S PIZZERIA
11701 LAKE VICTORIA GARDENS AVE., STE 3101
PALM BEACH GARDENS, FL 33410

This document, and the ideas and designs incorporated herein, as an instrument of professional service, is the property of Aaron M. King, and is not to be used, in whole or in part, for any other project, without the written authorization of Aaron M. King.

Revisions:

No.	Date	Description

Project: DOWNTOWN at the GARDENS
Drawn: Aaron M. King
Approved:
Issue Date: 12/28/2010

Sheet Title: GENERAL NOTES, LEGENDS, AND ABBREVIATIONS

Sheet No: **G002**