MECHANICAL GENERAL NOTES:

1. THESE DRAWINGS ARE DIAGRAMMATIC. ALL OFFSETS, FITTINGS, TRANSITIONS AND ACCESSORIES ARE NOT SHOWN. THE CONTRACTOR SHALL INCLUDE IN HIS BID ALL ITEMS REQUIRED TO PROVIDE A COMPLETE AND OPERATIONAL SYSTEM. DO NOT SCALE DRAWINGS FOR INSTALLATION.
2. ALL WORK SHALL BE PERFORMED IN A FIRST CLASS WORKMANLIKE MANNER BY LICENSED CONTRACTORS.
3. THE CONTRACTOR SHALL OBTAIN AT HIS EXPENSE ALL NECESSARY FEES PERMITS, AND TESTS.
4. ALL WORK SHALL CONFORM TO ALL APPLICABLE LOCAL, STATE AND NATIONAL CODES. NO CONTRACTOR SHALL BID UNLESS FAMILIAR WITH THESE CODES.
5. CORRECTION OF DEFECTS TO THIS WORK SHALL BE MADE PROMPTLY WITHOUT CHARGE TO THE OWNER. REPAIR AND REPLACEMENT FOR DAMAGE CAUSED BY THIS CONTRACTOR SHALL BE MADE PROMPTLY WITHOUT CHARGE TO THE OWNER.
6. ALL WORK OF THIS TRADE SHALL BE COORDINATED WITH ALL OTHER TRADES TO AVOID ANY INTERFERENCES THAT MAY DELAY PROGRESS OF CONSTRUCTION.
7. THE CONTRACTOR SHALL INCLUDE THE WORK OF ALL REQUIRED SUB-CONTRACTORS, SUCH AS ELECTRICAL, INSULATING, TEST & BALANCE, ETC., AS REQUIRED FOR A COMPLETE AND OPERATIONAL SYSTEM.
8. EQUIPMENT SHALL BEAR A U.L. OR OTHER RECOGNIZED LABEL, NAMEPLATES, WIRING DIAGRAMS, AND ENERGY RATINGS AS APPLICABLE.
9. THE CONTRACTOR SHALL INSTALL ALL EQUIPMENT AND ACCESSORIES TO BE READLY ACCESSIBLE FOR SERVICING, TESTING, BALANCING, AND REPLACEMENT.
10. THE CONTRACTOR SHALL PROVIDE A WRITTEN GUARANTEE AGAINST DEFECTS IN ALL MATERIALS AND WORKMANSHIP FOR ONE YEAR FROM ACCEPTANCE, WITH FOUR ADDITIONAL YEARS OF WARRANTY ON COMPRESSORS.
11. THE CONTRACTOR SHALL PROVIDE THREE COPIES OF SUBMITTAL DATA, SHOP DRAWINGS, AND AT COMPLETION OF THE PROJECT TWO SETS OF OPERATION AND MAINTENANCE MANUALS FOR ALL PROJECT ITEMS.
12. PROVIDE ALL CONTROLS, STARTERS, CONTROL WIRING, DISCONNECTS, AND OTHER ELECTRICAL EQUIPMENT AS REQUIRED FOR A COMPLETE AND OPERATIONAL SYSTEM.
13. THE HVAC CONTRACTOR IS RESPONSIBLE FOR MAINTAINING, ON SITE, A DETAILED AS-BUILT PLAN SHOWING ACTUAL INSTALLATIONS. THE CONTRACTOR IS TO PROVIDE A NEATLY DRAWN COMPREHENSIVE AS-BUILT SET OF PLANS UPON COMPLETION, WHICH ARE SUITABLE FOR SUBMISSION TO THE BUILDING DEPARTMENT AND TO THE OWNER.
14. PRIOR TO ACCEPTANCE BY THE OWNER THE SYSTEMS SHALL BE TESTED AND BALANCED BY AN INDEPENDENT AABC OR NEBB CERTIFIED TEST & BALANCE FIRM, AND A TYPEWRITTEN COMPREHENSIVE REPORT SUBMITTED.
15. SUPPLY AND INSTALL DUCT MOUNTED SMOKE DETECTORS AS REQUIRED.
16. COORDINATE LOCATION OF CEILING DIFFUSERS, GRILLES AND REGISTERS IN THE FIELD WITH LIGHTS AND ARCHITECTURAL ELEMENTS.
17. ALL GRILLES TO BE TITUS OR METALLAIRE UNLESS OTHERWISE NOTED, SIZES AS SHOWN ON PLANS, ALUMINUM CONSTRUCTION.
18. ALL DUCT WORK SHALL BE BUILT AND INSTALLED IN ACCORDANCE WITH SMACNA STANDARDS AND LOCAL BUILDING CODES.
19. ALL DUCT SIZES ARE CLEAR INSIDE DIMENSIONS.
20. ALL OUTSIDE AIR DUCTWORK SHALL BE SHEETMETAL WITH EXTERIOR R-6 INSULATION. PROVIDE BLANKET TYPE INSULATION IN CONCEALED SPACES, AND BOARD TYPE IN EXPOSED AREAS.
21. ALL EXHAUST AIR DUCT SHALL BE GALVANIZED SHEET METAL CONSTRUCTED AND INSTALLED IN ACCORDANCE WITH ASHRAE AND SMACNA STANDARDS.
22. FLEXIBLE DUCT, WHERE SHOWN, SHALL BE U.L. CLASS 1, R-6 INSULATION.
23. LOW PRESSURE SUPPLY AND RETURN RECTANGULAR DUCTWORK IS RIGID DUCTBOARD, 1 IN. THICK, R-4.2 INSULATION.
24. PROVIDE ELBOW TURNING VANES IN ALL RECTANGULAR DUCTS WHERE TURNS ARE GREATER THAN 45 DEGREES.
25. PROVIDE BACKDRAFT DAMPERS FOR ALL EXHAUST FANS.
26. VERIFY ALL THERMOSTAT LOCATIONS WITH THE LANDLORD.
27. CONDENSATE DRAIN PIPING SHALL BE ABOVE GRADE COPPER DRAIN, WASTE AND VENT FITINGS. INSULATE ALL CONDENSATE PIPING W/3/4" IMCOA IMCOLOCK PIPE INSULATION.
28. CONDENSER WATER SUPPLY AND RETURN PIPING SHALL BE TYPE "L" COPPER. PROVIDE DIELECTRIC COUPLINGS FOR ALL CONNECTIONS BETWEEN DISSIMILAR MATERIALS. PROVIDE ISOLATOR PADS AT ALL HANGERS AND SUPPORTS.

GENERAL DEMOLITION NOTES

1. UNLESS OTHERWISE NOTED, ALL EQUIPMENT AND DUCTWORK IN THE PROJECT AREA WHICH IS NOT INDICATED TO REMAIN, IS TO BE REMOVED. THE CONTRACTOR SHALL INVESTIGATE THE PROJECT AREA PRIOR TO BID TO DETERMINE ALL REQUIRED DEMOLITION.
2. EXISTING CONDITIONS SHOWN ON THIS DRAWING ARE TAKEN FROM ORIGINAL DRAWINGS AND FIELD INVESTIGATION. ALL EXISTING CONDITIONS MUST BE VERIFIED PRIOR TO BID. FIELD CONDITIONS SHALL GOVERN.
3. DEMOLITION WORK IS NOT SPECIFICALLY IDENTIFIED ON THESE PLANS, AND MAY BE DESCRIBED ON THE ARCHITECTS PLANS. THE CONTRACTOR IS RESPONSIBLE FOR ALL REQUIRED DEMOLITION WHETHER SHOWN ON THE PLANS OR NOT.
4. ALL MECHANICAL SYSTEMS SERVING OTHER SPACES OR FLOORS, THAT RUN THROUGH THE PROJECT AREA SHALL REMAIN ACTIVE DURING CONSTRUCTION, SO AS NOT TO CAUSE ANY DISRUPTION TO THESE OTHER SPACES.
5. ALL ITEMS REMOVED UNDER THIS PROJECT SHALL BE DISPOSED OF OR TURNED OVER TO THE OWNER AT THE OWNER'S DISCRETION.
6. PROPERLY REMOVE AND DISPOSE OF ALL HVAC DUCTWORK AND AIR DISTRIBUTION DEVICES WHICH ARE TO BE REMOVED. CONSULT WITH OWNER AND OBTAIN THE OWNER'S APPROVAL PRIOR TO DISPOSAL OF REMOVED MATERIAL.
7. IT IS THE CONTRACTOR'S RESPONSIBILITY TO ENSURE THAT ALL PIPING AND DUCTS, NEW OR EXISTING, WITHIN THE PROJECT AREA, ARE PROPERLY SUPPORTED.
8. ALL OCCUPIED SPACES ARE TO REMAIN OPERATIONAL DURING BUSINESS HOURS THROUGHOUT THE DEMOLITION AND CONSTRUCTION PERIOD. COORDINATE ALL WORK AS DESCRIBED IN THE ARCHITECTS DOCUMENTS.

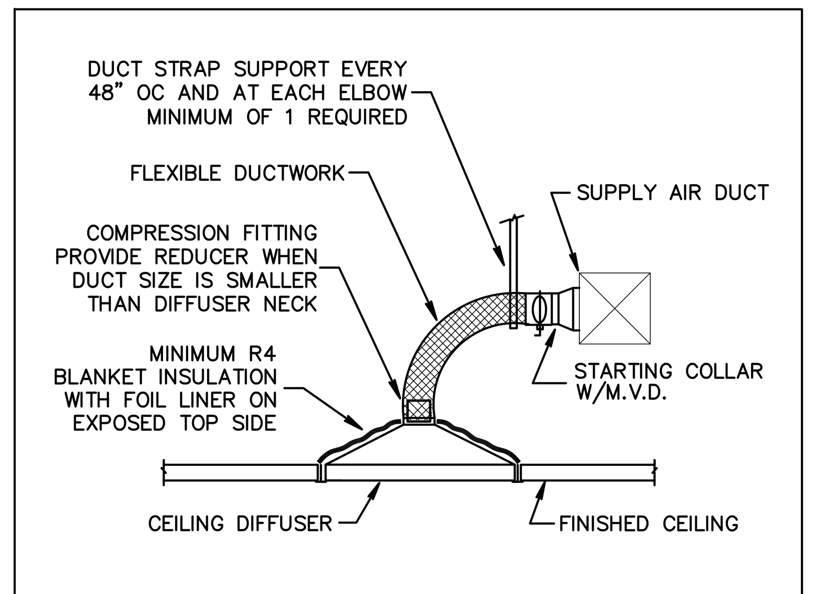

CEILING DIFFUSER DETAIL

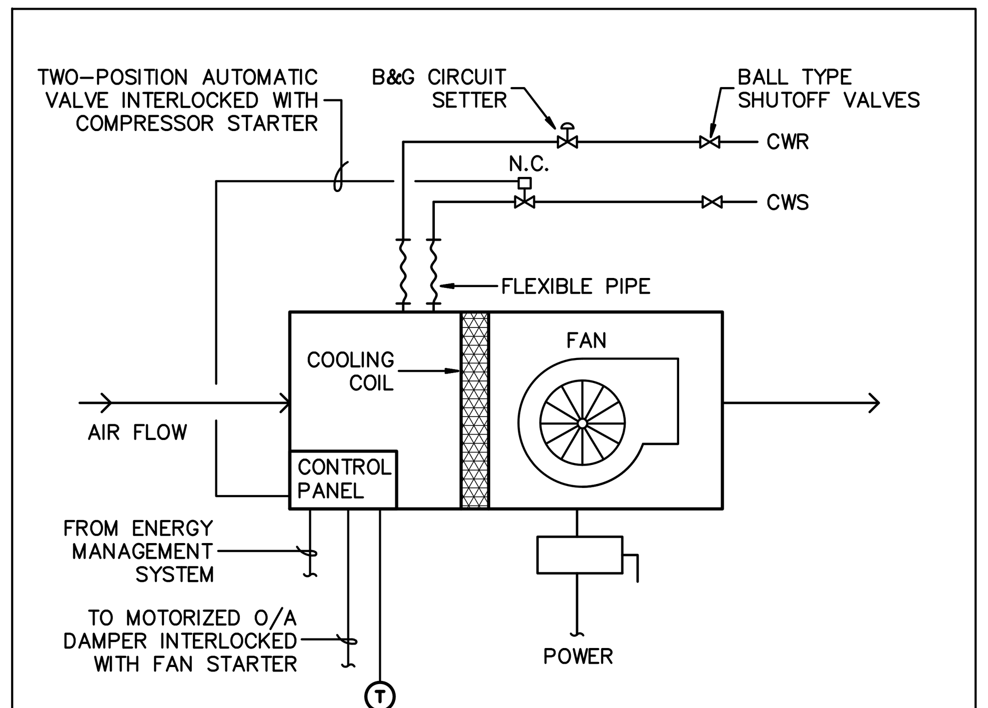

HEAT PUMP CONNECTION DETAIL

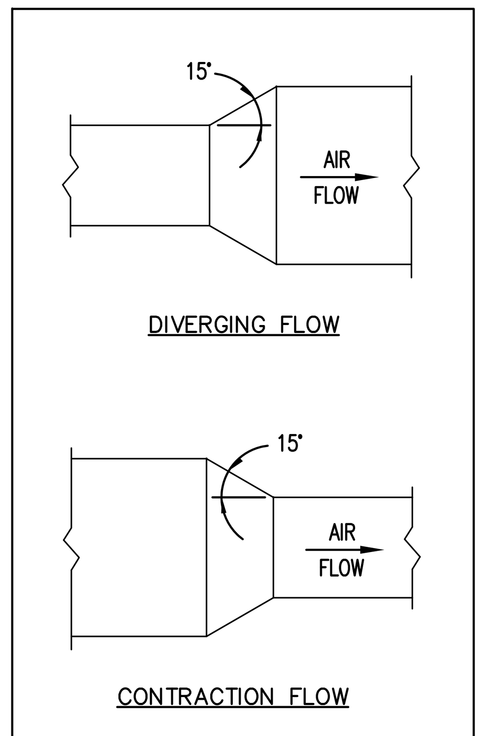

DUCT TRANSITIONS

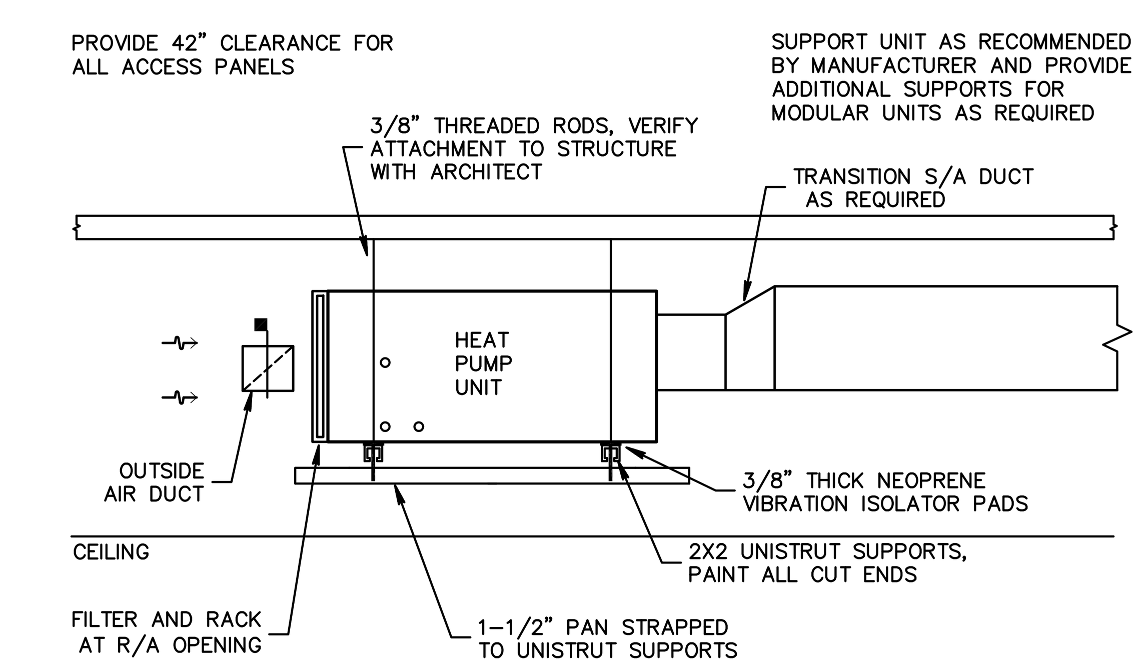

PROVIDE FLOAT SWITCH IN THE EMERGENCY DRAIN PAN FOR SHUTDOWN OF UNIT.

HORIZONTAL HEAT PUMP DETAIL

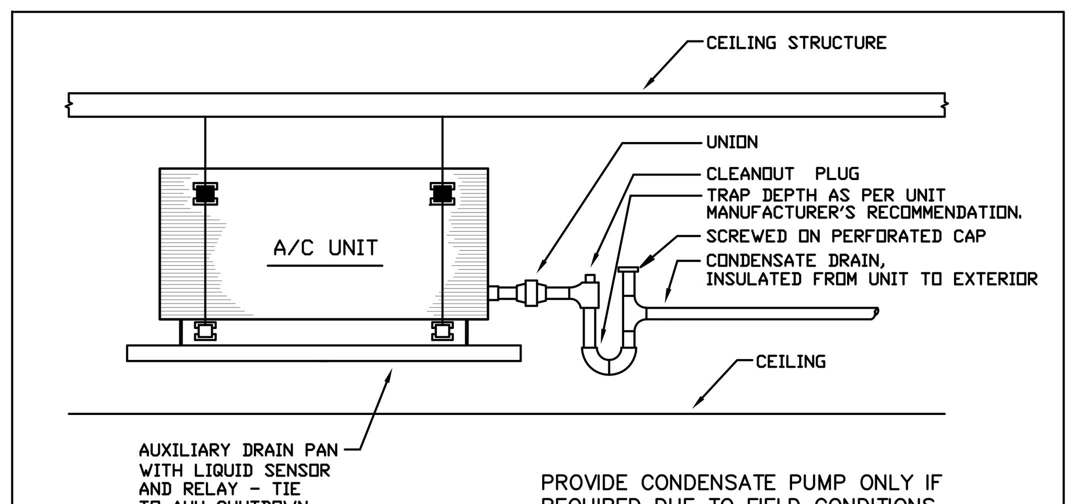

PROVIDE CONDENSATE PUMP ONLY IF REQUIRED DUE TO FIELD CONDITIONS

CONDENSATE TRAP DETAIL

HORIZONTAL HEAT PUMP A/C UNIT SCHEDULE

A/C UNIT TAG NO.	HP-1	EHP-2 (1)	HP-3	HP-4
MANUFACTURER	FHP	FHP	FHP	FHP
MODEL NO.	EC060	EM028	EC048	EC018
TOTAL SENSIBLE M.B.H.	47.8	–	36.5	14.4
TOTAL COOLING M.B.H.	62.3	–	47.8	18.7
HEATING CAPACITY M.B.H.	79.0	–	58.0	24.0
SUPPLY AIR CFM/EXT. S.P.	2000/0.4	800/0.6	1600/0.6	600/0.5
OUTSIDE AIR CFM	SEE CALCULATIONS			
EER	13.2	–	14.0	13.0
COP	4.4	–	4.8	4.4
GPM	15.0	7.0	12.0	4.5
PIPE SIZE	1"FPT	3/4"FPT	1"FPT	3/4"FPT
UNIT SIZE (WxLxH)	36X43X21	–	36X43X21	22X43X17
OPERATING WEIGHT LBS.	339	–	304	180
MCA	14.6	–	13.0	8.9
MAX. FUSE SIZE	20	–	20	15
POWER VOLT-PH-HZ	480-3-60	277-1-60	480-3-60	277-1-60
COMPRESSORS:				
NO. OF COMPRESSORS	1	–	1	1
NO. OF STEPS	1	–	1	1
NOMINAL TONS	5.0	2.5	4.0	1.5
R.L.A. EACH	9.7	–	8.4	5.8
INDOOR FANS:				
NO. OF FAN(S)/MOTORS	1		1	1
FAN MOTOR H.P. EACH	3/4	–	3/4	1/4
FAN MOTOR F.L.A. EACH	2.5	–	2.5	1.6

ACCESSORIES AND NOTES:

PROVIDE HIGH TEMPERATURE & PRESSURE STAINLESS STEEL BRAIDED HOSE KIT WITH BALL VALVES, STAINLESS STEEL CLAMPS AND BRASS FITTINGS FOR ALL UNITS.

RATINGS SHOWN ARE AT 80°DB, 67°WB EAT AND 85° EWT

(1) EXISTING A/C UNIT TO BE RE-INSTALLED PER THESE PLANS AND DETAILS. PROVIDE ANY REQUIRED MAINTENANCE, THOROUGHLY CLEAN THE UNIT INSIDE AND OUT, INCLUDING ALL SURFACES, THE COILS AND ALL OTHER COMPONENTS, USING A VACUUM AND OTHER APPROPRIATE NON-CORROSIVE MATERIALS AND METHODS. STRAIGHTEN ANY BENT COIL FINS AND REPLACE ANY MISSING HARDWARE. PROVIDE NEW FILTERS AMD R/A PLENUM, BALANCE AIR AND WATER QUANTITIES AND VERIFY PROPER OPERATION.

Gilman & Associates, Inc.
MECHANICAL & ELECTRICAL ENGINEERS
507 NORTH LAKESIDE DRIVE
Lake Worth, FL 33460 C.A.#009078
(561) 582-0210 Fax (561) 582-8212
RONALD D. GILMAN P.E. #37933

PROJ.# 12-021

OUTSIDE AIR CALCULATIONS

	HP-1	EHP-2				HP-3	HP-4			
ZONE TYPE	OFFICE	OFFICE	BREAK	WAITING	CORRIDOR	OFFICE	OFFICE	BREAK	WAITING	CORRIDOR
SQUARE FEET OF AREA	950	472	154	194	160	806	286	136	172	102
CFM/SQ.FT. REQUIRED	0.06	0.06	0.06	0.06	0.06	0.06	0.06	0.06	0.06	0.06
TOTAL OCCUPANTS	5	3	4	2	0	5	2	3	2	0
CFM/PERSON REQUIRED	5	5	5	5	0	5	5	5	5	0
ZONE CFM		43	29	22	10		27	23	20	6
SYSTEM CFM	82				104	73				76

ABOVE PER ASHRAE 62.1, 2007

AIR DISTRIBUTION SCHEDULE

MARK	MAKE	MODEL	SIZE	NECK	MATERIAL	BORDER TYPE	MOUNTING TYPE	DAMPER	THROW	FINISH	REMARKS
A	TITUS	PAS-AA	24X24	6"ø	ALUMINUM	3	LAY-IN	AG-100	4 WAY	WHITE	SEE NOTES
B	TITUS	PAS-AA	24X24	8"ø	ALUMINUM	3	LAY-IN	AG-100	4 WAY	WHITE	SEE NOTES
C	TITUS	PAS-AA	24X24	10"ø	ALUMINUM	3	LAY-IN	AG-100	4 WAY	WHITE	SEE NOTES
RA	TITUS	PAR-AA	24X24	22X22	ALUMINUM	3	LAY-IN	–	–	WHITE	SEE NOTES
RB	TITUS	PAR-AA	24X12	22X10	ALUMINUM	3	LAY-IN	–	–	WHITE	SEE NOTES

PROVIDE ROUND FLEXIBLE DUCT RUN-OUT SIZED TO MATCH S/A DIFFUSER NECK UNLESS NOTED OTHERWISE.
PROVIDE DAMPERS ONLY WHERE DUCT TAKE-OFF DAMPER IS NOT ACCESSIBLE ABOVE CEILING.

HVAC DETAILS

NO SCALE

Bd
birse design inc.
5300 woodland lakes drive
palm beach gardens, fl 33418
phone 561-249-4001
fax 772-409-8684
AA26001615

BOWEN MICLETTE BRITT

1400 CENTREPARK
1400 CENTREPARK DR
WEST PALM BEACH, FL

PROJECT NUMBER CP29

REVISIONS
1
2
3
4
5

THIS DESIGN AND THESE DRAWINGS ARE THE PROPERTY OF BIRSE DESIGN INC. NO PART OF THIS WORK MAY BE BE REPRODUCED WITHOUT PRIOR WRITTEN PERMISSION FROM BIRSE DESIGN INC.

DRAWN BY GD

CD

7/13/12

M-2